EN

DEMOLITION TOOLS

FOR ROUGH DEMOLITION AND RECYCLING

Rammer Cutter-Crushers, Pulverizers, Grapples, Shears and Multiprocessors are designed to perform a broad array of duties. Engineered for both primary and secondary applications, these products are designed to provide optimum operational flexibility. These attachments can cut, crush, segregate and pulverize a wide variety of construction materials to facilitate more controlled dismantling, more effective recycling and material handling.

As a leading force in the demolition and recycling sector, we use our years of experience in breaking business to offer attachments that combine power and compact dimensions, durability and lightweight characteristics. Attachments that allow you to work safer and smarter.

SAFETY IS A TOP PRIORITY IN EVERYTHING WE DO

In the factory

Safety is the primary consideration. Visitors are to consider and improve safety to help us achieve our aim of zero accidents.

Products

Safety is the driving force behind the development of all our products. Our aim is to set the safety standard by making products that are safe to operate and maintain. Rammer operator and service training packages reinforce that message to ensure the safety of your entire workforce. Always study and follow the safety instructions (operator's manual) before installing, maintaining or operating the product.

Process

Rammer products also improve the safety of the working site and its processes. Rammer products have been designed the safety in mind - For example our Grapples featuring important Safety Valve, avoiding material falling off the shells in case of any problems in carrier hydraulic hydraulics or lines.

Safety – Your Advantage

Injuries can impact upon an entire workforce and resulting in lost working days and a loss of production. A safe site is a productive site.

Environment

Rammer products are manufactured utilizing state-of-the-art technology. Our manufacturing processes are certified against ISO standards with focus on low energy consumption, recycling of cutting fluids and metal chips. Furthermore, when Rammer products reach the end of their useful working life, more than 90 percent of the metallic components can be recycled.

40 YEARS OF INNOVATION

SINCE 1978
40
YEARS

Manufacturing of Rammer branded hydraulic hammers started in 1978 – ever since it has grown to be a recognized world leader in the supply and support of hammers, and other hydraulic attachments such as demolition tools and breaker booms.

The Rammer brand and its reputation is built on quality: quality of manufacture, proven by its ISO standards, quality of support through the professional, worldwide dealer network and quality of exceptional people delivering the finest attachments in the mining and construction business.

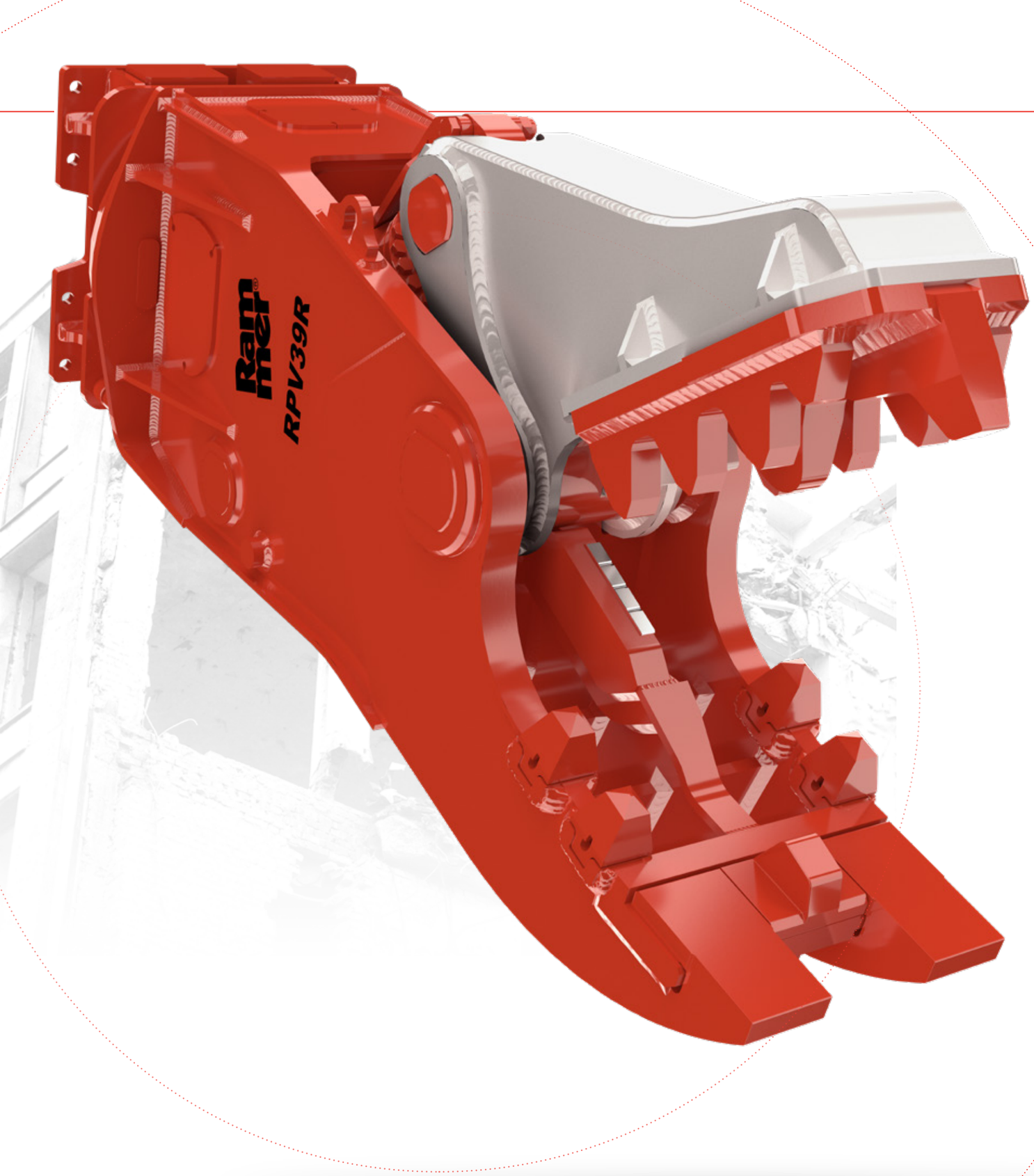

ROTATING PULVERIZERS

The Rammer RPV Rotating Pulverizer range is ideally suited to a wide range of primary and secondary demolition duties. The built in rotation that comes as standard on RPV Rotating range allows for added manoverability for fast and effective material separation.

HEAT TREATED PINS AND BUSHINGS
Hardened parts are more wear resistant, extending their working life and lowering owning and operating costs

BOLT ON CUTTING BLADES
Field replaceable and adjustable cutter blades minimize downtime and significantly increase the working life of wear parts

SPEED VALVE
Shorter working cycles increase productivity

HYDRAULIC ROTATION WITH PROTECTION VALVE
The protected rotation system allows precision tool placement, reducing owning and operating costs.

FIELD REPLACEABLE WEAR PARTS
Minimise downtime as there is no need for welding/rebuilding

GRATED JAW DESIGN
The fixed jaw allows crushed material to pass through increasing productivity

MANUFACTURED OF HB400 STEEL
Highly resistant material to work on concrete

ROTATING PULVERIZERS

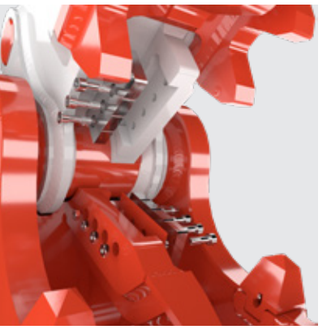

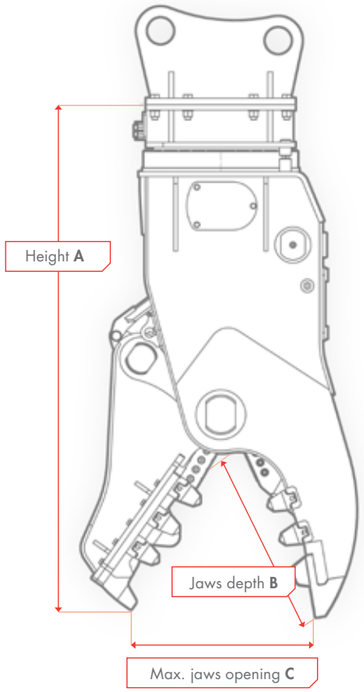

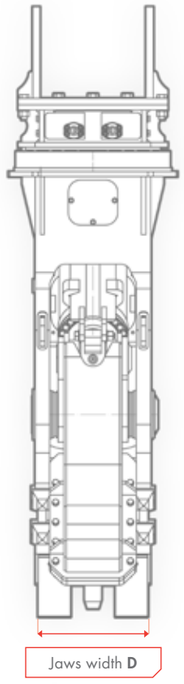

	RPV14R	RPV22R
Working weight, kg (lb)	1150 (2540)	2080 (4590)
Operating pressure, bar (psi)	300-350 (4350-5075)	300-350(4350-5075)
Oil flow, l/min (gal/min)	100-180 (26.4-47.6)	180-200 (47.6-52.8)
Rotation working pressure, bar (psi)	190-200 (2755-2900)	130-150 (1885-2175)
Rotation oil flow, l/min (gal/min)	10-15 (2.6-4.0)	30-40 (7.9-10.6)
Blade length, mm	122 (4.80)	180 (7.09)
Replaceable tips	yes	yes
Carrier weight, range, ton (lb)	10-18 (22000-39700)	18-26 (39700-57300)

DIMENSIONS

Height, mm (in)	A	1710 (67.32)	2130 (83.86)
Jaws depth, mm (in)	B	590 (23.23)	730 (28.74)
Max. jaws opening, mm (in)	C	580 (22.83)	750 (29.53)
Jaws width, mm (in)	D	410 (16.14)	475 (18.70)

	RPV29R	RPV39R
Working weight, kg (lb)	2990 (6590)	4245 (9360)
Operating pressure, bar (psi)	300-350 (4350-5075)	300-350 (4350-5075)
Oil flow, l/min (gal/min)	200-220 (52.8-58.1)	220-280 (58.1-74.0)
Rotation working pressure, bar (psi)	100-115 (1450-1670)	100-115 (1450-1670)
Rotation oil flow, l/min (gal/min)	30-40 (7.9-10.6)	30-40 (7.9-10.6)
Blade length, mm	220 (8.66)	220 (8.66)
Replaceable tips	yes	yes
Carrier weight, range, ton (lb)	26-32 (57300-70500)	32-45 (70500-99200)

DIMENSIONS

Height, mm (in)	A	2400 (94.49)	2680 (101.57)
Jaws depth, mm (in)	B	850 (33.46)	870 (34.25)
Max. jaws opening, mm (in)	C	900 (35.43)	1000 (39.37)
Jaws width, mm (in)	D	870 (34.25)	620 (24.41)

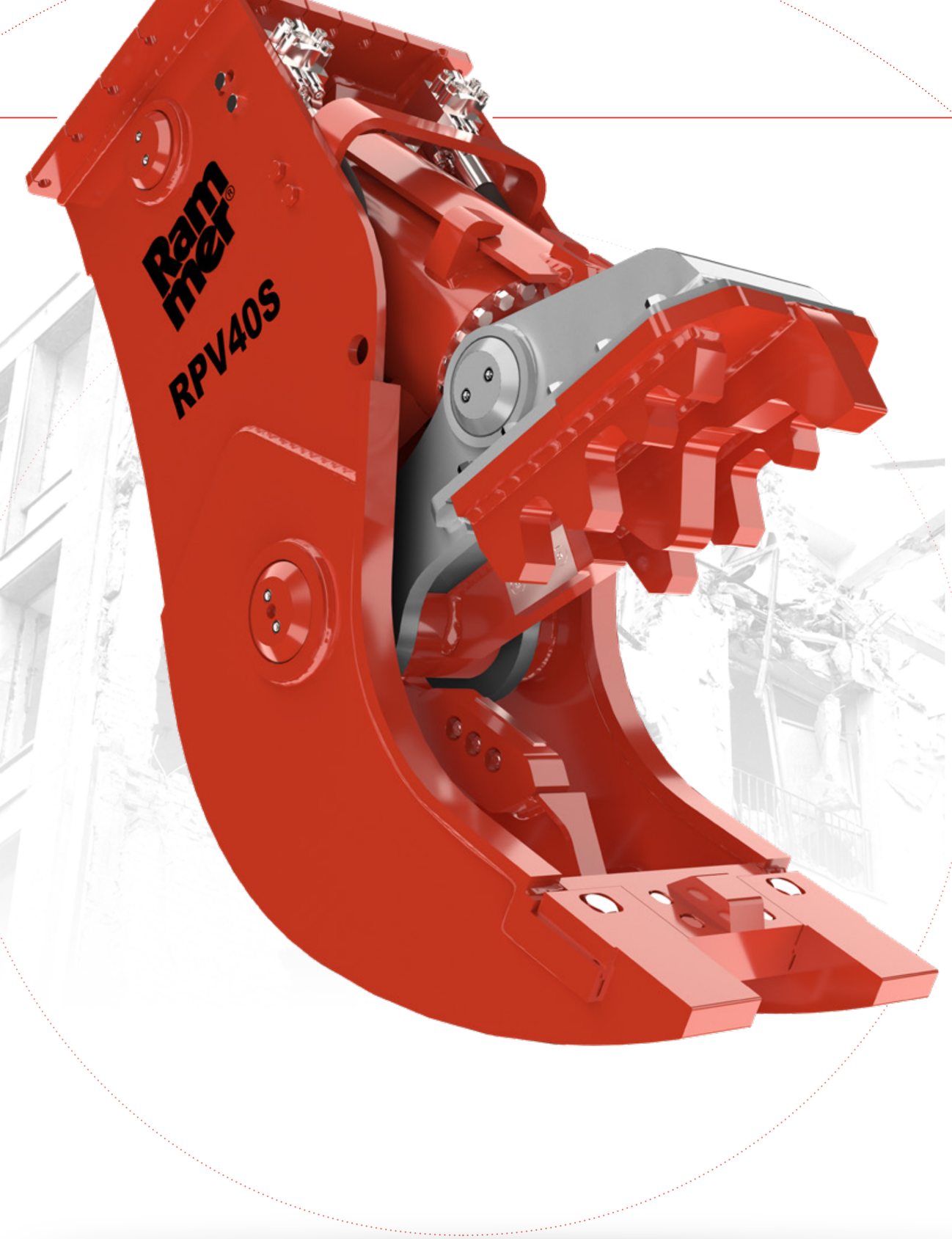

STATIC PULVERIZERS

The Rammer RPV Static Pulverizer range is ideally suited to a wide range of secondary demolition and recycling duties. The RPV range of models is designed for fast and effective material separation, a key aspect of the recycling process.

SPEED VALVE
Shorter working cycles increase productivity

FIELD REPLACEABLE WEAR PARTS
Minimise downtime as there is no need for welding/rebuilding

HEAT TREATED PINS AND BUSHINGS
Hardened parts are more wear resistant, extending their working life and lowering owning and operating costs

GRATED JAW DESIGN
The fixed jaw allows crushed material to pass through, increasing productivity

MANUFACTURED OF HB400 STEEL
Highly resistant material to work on concrete

BOLT ON CUTTING BLADES
Field replaceable and ajustable cutter blades minimize down-time and signifantly increase the working life of wear parts

STATIC PULVERIZERS

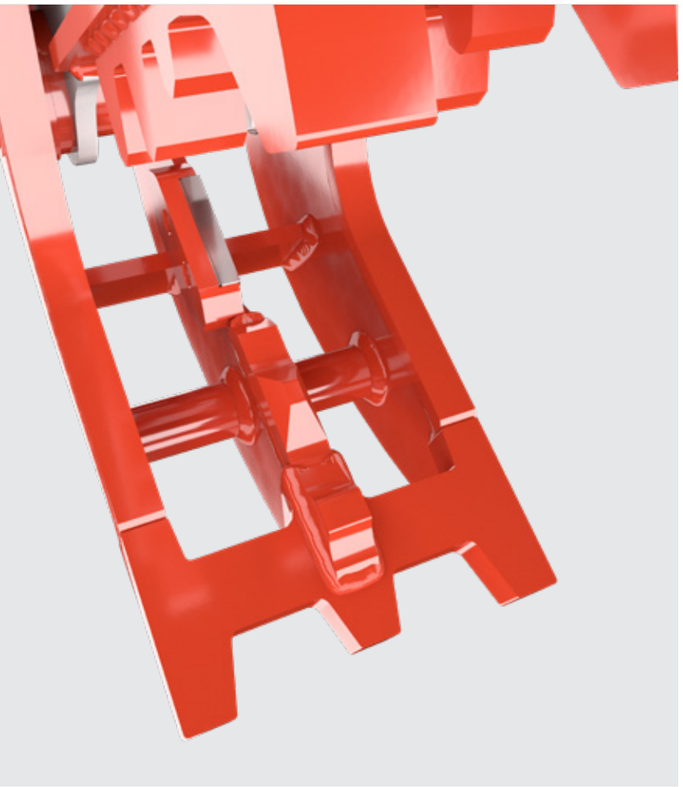

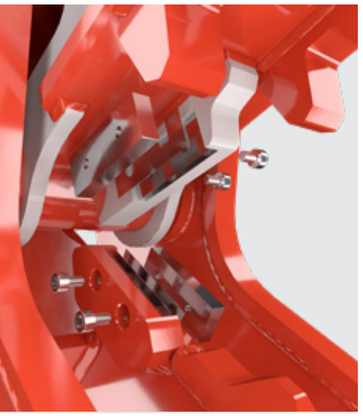

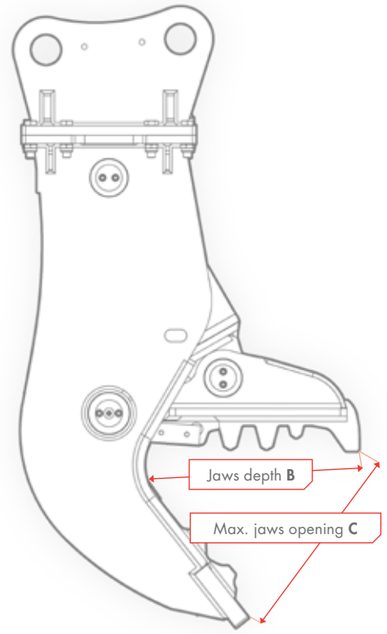

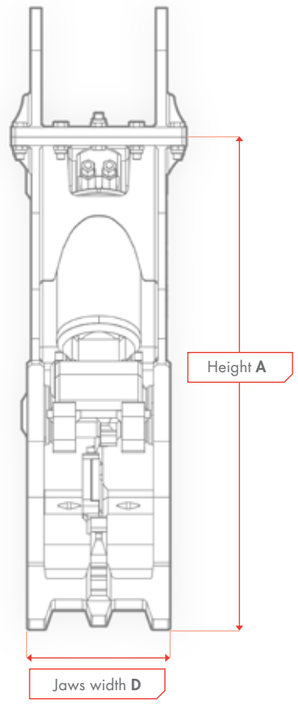

	RPV03S	RPV07S	RPV14S
Working weight, kg (lb)	140 (310)	490 (1080)	1065 (2350)
Operating pressure, bar (psi)	200-250 (2900-3626)	220-280 (3190-4060)	280-320 (4060-4640)
Oil flow, l/min (gal/min)	30-60 (7.9-15.9)	80-100 (21.1-26.4)	100-180 (26.4-47.6)
Blade length, mm (in)	80 (3.15)	120 (4.72)	122 (4.80)
Replaceable tips			yes
Carrier weight range, ton (lb)	1.5-4 (3300-8800)	4-10 (8800 - 22000)	10-18 (22000-39700)

DIMENSIONS

Height, mm (in)	A	770 (30.30)	1225 (48.2)	1600 (63.0)
Jaws depth, mm (in)	B	340 (13.39)	515 (20.28)	625 (24.61)
Max. jaws opening, mm (in)	C	300 (11.80)	480 (18.9)	620 (24.4)
Jaws width, mm (in)	D	220 (8.70)	350 (13.8)	460 (18.1)

	RPV22S	RPV30S	RPV40S
Working weight, kg (lb)	2205 (4860)	3080 (6790)	4180 (9220)
Operating pressure, bar (psi)	280-320 (4060-4640)	280–320 (4060-4640)	280-320 (4060-4640)
Oil flow, l/min (gal/min)	180-220 (47.6-58.1)	220–280 (58.1-74.0)	280-320 (74.0-84.5)
Blade length, mm (in)	180 (7.09)	180 (7.09)	220 (8.66)
Replaceable tips	yes	yes	yes
Carrier weight, range, ton (lb)	18-25 (39700-55100)	25–35 (55100-77200)	35-45 (77200-99200)

DIMENSIONS

Height, mm (in)	A	2070 (81.5)	2400 (94.5)	2700 (106.3)
Jaws depth, mm (in)	B	800 (31.50)	950 (37.40)	1100 (43.31)
Max. jaws opening, mm (in)	C	830 (32.68)	1000 (39.37)	1150 (45.28)
Jaws width, mm (in)	D	550 (21.7)	605 (23.8)	660 (26.0)

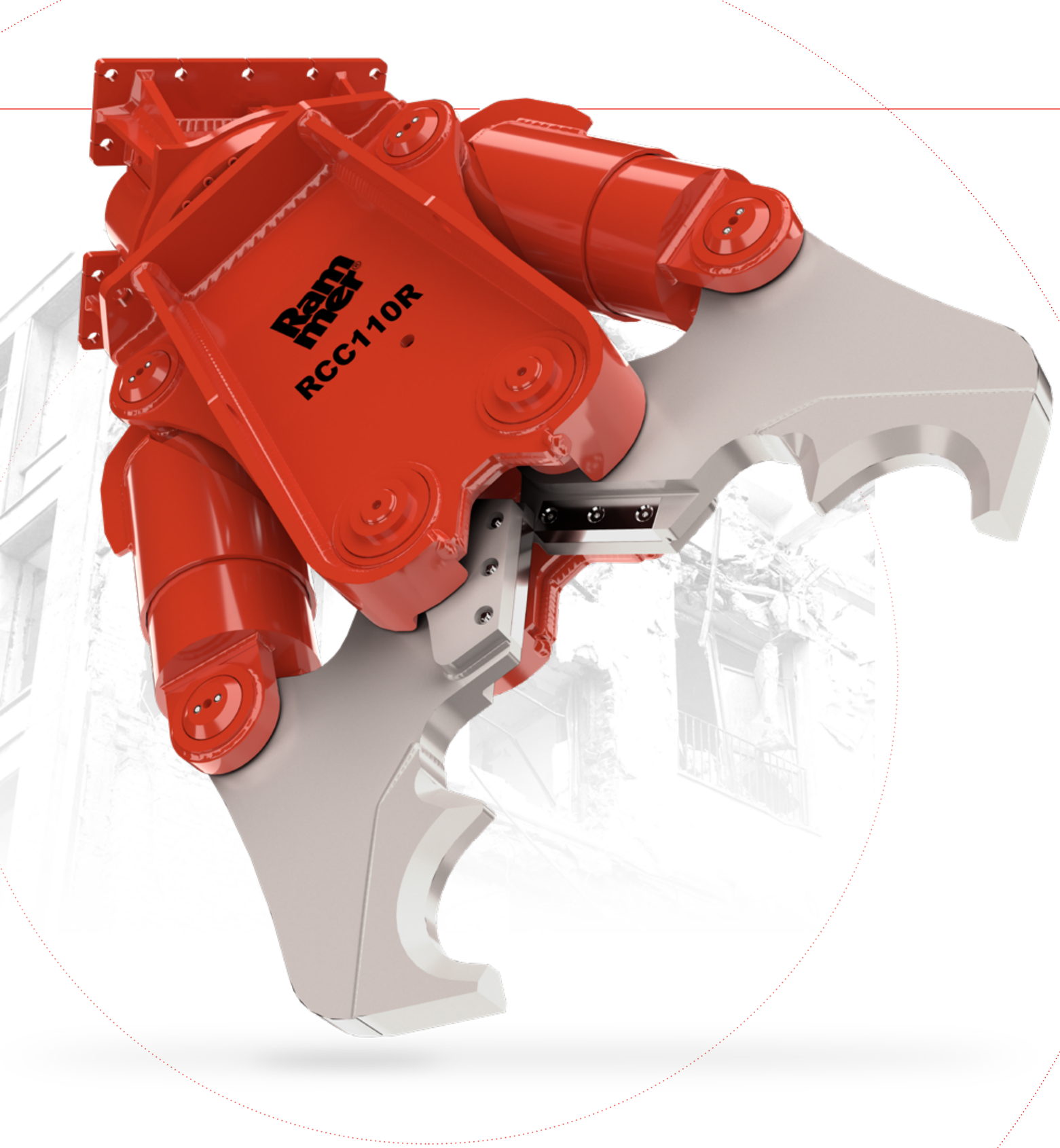

CUTTER CRUSHERS

The Rammer RCC Cutter-Crusher range models feature dual cylinders and a robust design. The RCC Cutter-Crusher range models are an efficient alternative to other demolition methods and are ideally suited to environmentally sensitive applications where low vibration, noise and dust are of concern, and thanks to two powerful cylinders, the 360° rotation and the materials used, this attachment is the best solution for standard and high reach demolition.

HEAT TREATED PINS AND BUSHINGS
Hardened parts are more wear resistant, extending their working life and lowering owning and operating costs

BOLT ON CUTTING BLADES
Field replaceable and ajustable cutter blades minimize downtime and signifantly increase the working life of wear parts

SPEED VALVE
Shorter working cycles increase productivity

HYDRAULIC ROTATION WITH PROTECTION VALVE
The protected rotation system allows precision tool placement, lowering/reducing owning and operating costs.

DESYNCHRONIZED JAWS
Easier positionning in difficult situations which increases productivity

HYDRAULIC CYLINDER SHIELDING
The cylinders are fully protected throughout the working cycle. Increasing durability and extending service intervals.

MANUFACTURED OF HB400 STEEL
Highly resistant material to work on concrete

CUTTER CRUSHERS

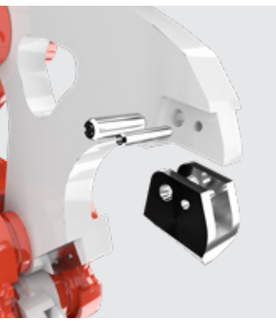

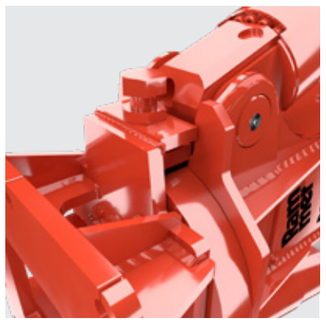

RCC04R

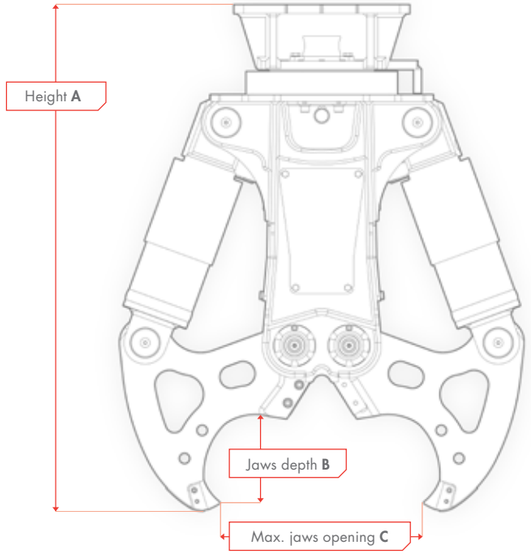

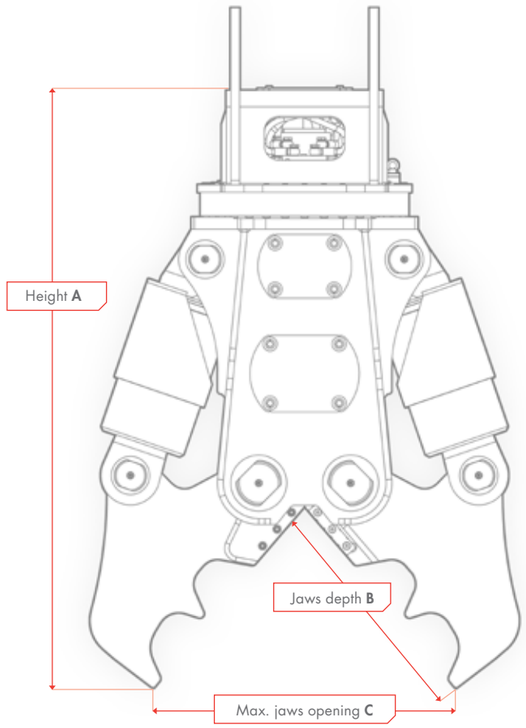

	RCC04R
Working weight, kg (lb)	340 (750)
Operating pressure, bar	250 bar (3625 psi)
Oil flow, l/min	65 l/min (17.2 gal/min)
Blade length, mm (in)	85 (3.35)
Booster	yes
Replaceable tips	yes
Carrier weight, ton (lb)	3-6 (6600-13200)

	RCC10R
Working weight, kg (in)	675 (1490)
Operating pressure, bar (psi)	200-250 (2900-3625)
Oil flow, l/min (gal/min)	50-90 (13.2-23.8)
Rotation working pressure, bar (psi)	130-150 (1885-2175)
Rotation oil flow, l/min (gal/min)	15-20 (4.0-5.3)
Blade length, mm (in)	140 (5.51)
Carrier weight, ton	5-14 (11000-30900)

DIMENSIONS

		RCC04R			RCC10R
Height, mm (in)	A	1105 (43.50)	Height, mm (in)	A	1315 (51.77)
Jaws depth, mm (in)	B	200 (7.87)	Jaws depth, mm (in)	B	400 (15.75)
Max. jaws opening, mm (in)	C	440 (17.32)	Max. jaws opening, mm (in)	C	450 (17.72)

	RCC16R	RCC21R
Working weight, kg (lb)	1590 (3510)	2230 (4920)
Operating pressure, bar (psi)	280-320 (4060-4640)	280-320 (4060-4640)
Oil flow, l/min (gal/min)	130-150 (34.3-39.6)	180-220 (47.6-58.1)
Rotation working pressure, bar (psi)	90-100 (1305-1450)	130-150 (1885-2175)
Rotation oil flow, l/min (gal/min)	30-40 (7.9-10.6)	30-40 (7.9-10.6)
Blade length, mm (in)	160 (6.30)	175 (6.89)
Carrier weight, ton (lb)	14-18 (30900-39700)	18-24 (39700-52900)

DIMENSIONS

		RCC16R	RCC21R
Height, mm (in)	A	1995 (78.54)	2000 (78.74)
Jaws depth, mm (in)	B	700 (27.56)	800 (31.50)
Max. jaws opening, mm (in)	C	825 (32.48)	985 (38.78)

CUTTER CRUSHERS

	RCC30R	RCC43R
Working weight, kg (lb)	2855 (6290)	4770 (10520)
Operating pressure, bar (psi)	280–320 (4060-4640)	280-320 (4060-4640)
Oil flow, l/min (gal/min)	220–250 (58.1-66.0)	250-300 (66.0-79.3)
Rotation working pressure, bar (psi)	130-150 (1885-2175)	100-115 (1450-1670)
Rotation oil flow, l/min (gal/min)	30-40 (7.9-10.6)	30-40 (7.9-10.6)
Blade length, mm (in)	250 (9.84)	300 (11.81)
Carrier weight, ton (lb)	24–35 (52900-77200)	35-50 (77200-110200)

DIMENSIONS

Height, mm (in)	A	2200 (86.61)	2800 (110.24)
Jaws depth, mm (in)	B	900 (35.43)	1160 (45.67)
Max. jaws opening, mm (in)	C	1100 (43.31)	1350 (53.15)

	RCC60R	RCC80R	RCC110R
Working weight, kg (lb)	6250 (13780)	8800 (19400)	12000 (26460)
Operating pressure, bar (psi)	320-350 (4640-5080)	320-350 (4640-5075)	320-350 (4640-5075)
Oil flow, l/min (gal/min)	320-350 (84.54-92.46)	500-600 (132.1-158.5)	600-800 (158.5-211.3)
Rotation working pressure, bar (psi)	100-115 (1450-1670)	140-150 (2030-2175)	190-200 (2755-2900)
Rotation oil flow, l/min (gal/min)	30-40 (7.9-10.6)	50-60 (13.2-15.9)	60-75 (15.9-19.8)
Blade length, mm (in)	300 (11.81)	300 (11.81)	300 (11.81)
Carrier weight, ton (lb)	50-65 (110200-143300)	70–90 (154300-198400)	90–130 (198400-286600)
Automatic grease system	yes	yes	yes

DIMENSIONS

Height, mm	A	3020 (118.90)	3400 (133.86)	3200 (125.98)
Jaws depth, mm	B	1240 (48.82)	1350 (53.15)	1450 (57.09)
Max. jaws opening, mm	C	1580 (62.20)	1750 (68.90)	2000 (78.74)

SCRAP SHEARS

The RSS Scrap Shears can be used in every industrial demolition job involving the cutting and recovery of ferrous materials such as iron sections, pipes, tanks, railway carriages etc

HYDRAULIC ROTATION WITH PROTECTION VALVE
The protected rotation system allows precision tool placement, lowering/reducing owning and operating costs.

BOLT ON, SYMMETRICAL CUTTER BLADES
Field replaceable and ajustable cutter blades minimize downtime and signifantly increase the working life of wear parts

SMART JAWS DESIGN FEATURING DOUBLE GUIDE
Avoids material to stuck between the jaws which increases productivity and cutting capacity

HEAT TREATED PINS AND BUSHINGS
Hardened parts are more wear resistant, extending their working life and lowering owning and operating costs

HYDRAULIC CYLINDER SHIELDING
The cylinders are fully protected throughout the working cycle. Increasing durability and extending service intervals.

REPLACEABLE PEARCING TIP
A bolt on pearcing tip, removes the need for welding and rebuilding which lowers the cost of owning and operation.

FIELD REPLACEABLE AND ADJUSTABLE CENTRAL PIN
Enables the operator to maintain the product on the site keeping cutting capacity on the maximum level.

SCRAP SHEARS

RSS05R

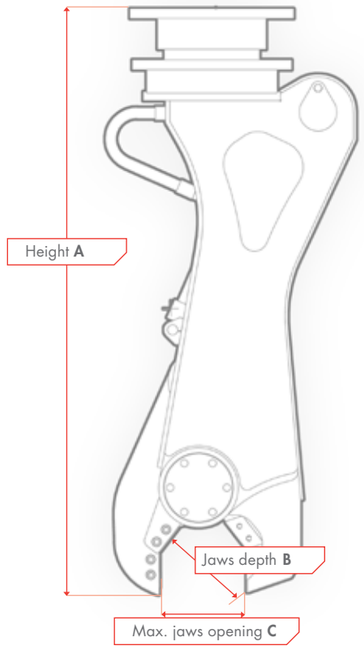

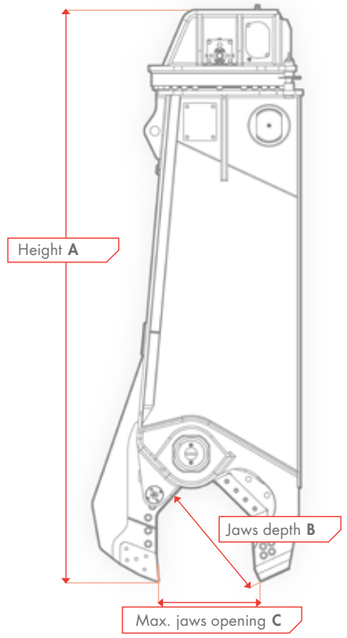

	RSS05R	RSS08R	RSS11R
Working weight, stick mounted, kg (lb)	385 (850)	675 (1490)	1100 (2425)
Working weight, boom mounted, kg (lb)	415 (915)	695 (1530)	1200 (2645)
Operating pressure, bar (psi)	200-250 (2900-3625)	250-300 (3626-4351)	250-300 (3625-4350)
Oil flow range, l/min (gal/min)	60-100 (15.9-26.4)	80-100 (21.1-26.4)	90-110 (23.8-29.1)
Rotation working pressure, bar (psi)	190-200 (2755-2900)	90-100 (1305-1450)	190-200 (2755-2900)
Rotation oil flow, l/min (gal/min)	10-15 (2.6-4.0)	15-20 (4.0-5.3)	10-15 (2.6-4.0)
Carrier weight stick mounted, ton (lb)	4-6 (8800-13200)	6-9 (13200-19800)	10-12 (22000-26500)
Carrier weight boom mounted, ton (lb)	2-4 (4400-13200)	4-6 (8800-13200)	7-10 (15400-22000)

DIMENSIONS

Height, mm (in)	A	1350 (53.15)	1900 (74.80)	2000 (78.74)
Jaws depth, mm (in)	B	200 (7.87)	290 (11.42)	395 (15.55)
Max. jaws opening, mm (in)	C	195 (7.68)	290 (11.42)	375 (14.76)

CUTTING CAPABILITIES

		RSS05R	RSS08R	RSS11R
Rod mm (in)	●	40 (1.57)	50 (1,97)	55 (2.17)
Pipe mm (in)	O	114x4 (4.49x0.16)	127x6 (5.00x0.24)	159x6 (6.26x0.24)
IPE mm (in)	I-I	120 (4.72)	200 (7.87)	240 (9.45)
HEA mm (in)	H	NA	120 (4.72)	200 (7.87)
HEB mm (in)	H	NA	80 (3.15)	120 (4.72)
Plate mm (in)	—	8 (0.31)	10 (0.39)	12 (0.47)
L profile mm (in)	L	120x10 (4.72x0.39)	160x12 (6.30x0.47)	140x12 (5.51x0.47)
Rail profile mm (in)	I	NO	NO	NO

		RSS15R	RSS23R
Rod mm (in)	●	55 (2.17)	65 (2.56)
Pipe mm (in)	O	159x6 (6.26x0.24)	203x8 (7.99x0.31)
IPE mm (in)	I-I	240 (9.45)	360 (14.17)
HEA mm (in)	H	200 (7.87)	280 (11.02)
HEB mm (in)	H	120 (4.72)	200 (7.87)
Plate mm (in)	—	12 (0.47)	15 (0.59)
L profile mm (in)	L	140x12 (5.51x0.47)	200x15 (7.87x0.59)
Rail profile mm (in)	I	NO	NO

	RSS15R	RSS23R
Working weight, stick mounted, kg (lb)	1200 (2650)	2130 (4700)
Working weight, boom mounted, kg	1320 (2910)	2200 (4850)
Operating pressure, bar (psi)	250-300 (3625-4350)	320-350 (4640-5075)
Oil flow range, l/min (gal/min)	90-110 (23.8-29.1)	150-200 (39.6-52.8)
Rotation working pressure, bar (psi)	90-110 (23.8-29.1)	130-150 (1885-2175)
Rotation oil flow, l/min (gal/min)	30-40 (7.9-10.6)	30-40 (7.9-10.6)
Carrier weight stick mounted, ton (lb)	13-17 (28700-37500)	18-27 (39700-59500)
Carrier weight boom mounted, ton (lb)	8-12 (17600-26500)	14-18 (30900-39700)

DIMENSIONS

Height, mm (in)	A	2100 (82.68)	2700 (106.30)
Jaws depth, mm (in)	B	395 (15.55)	525 (20.67)
Max. jaws opening, mm (in)	C	375 (14.76)	445 (17.52)

CUTTING CAPABILITIES	RSS34R	RSS45R	RSS58R	RSS80R
Rod mm (in)	85 (3.35)	100 (3.94)	110 (4.33)	130 (5.12)
Pipe mm (in)	324x10 (12.76x0.39)	406x12 (15.98x0.47)	508x14 (20.00x0.55)	560x16 (22.05x0.63)
IPE mm (in)	500 (19.68)	600 (23.62)	700 (27.56)	800 (31.50)
HEA mm (in)	340 (13.39)	400 (15.75)	500 (19.68)	650 (25.59)
HEB mm (in)	280 (11.02)	300 (11.81)	360 (14.17)	450 (17.72)
Plate mm (in)	20 (0.79)	25 (0.98)	25 (0.98)	30 (1.18)
L profile mm (in)	200x20 (7.87x0.79)	200x25 (7.87x0.98)	250x25 (9.84x0.98)	300x30 (11.81x1.18)
Rail profile mm (in)	NO	YES	YES	YES

SCRAP SHEARS

	RSS34R	RSS45R
Working weight, stick mounted, kg (lb)	3310 (7300)	4880 (10760)
Working weight, boom mounted, kg	3400 (7500)	4900 (10800)
Operating pressure, bar (psi)	320-350 (4640-5075)	320-350 (4640-5075)
Oil flow range, l/min (gal/min)	200-250 (52.8-66.0)	250-300 (66.0-79.3)
Rotation working pressure, bar (psi)	100-115 (1450-1670)	100-115 (1450-1670)
Rotation oil flow, l/min (gal/min)	30-40 (7.9-10.6)	30-40 (7.9-10.6)
Carrier weight stick mounted, ton (lb)	28-39 (61700-86000)	39-50 (86000-110231)
Carrier weight boom mounted, ton (lb)	20-28 (44000 - 61700)	28-39 (61700 - 86000)

DIMENSIONS

Height, mm (in)	A	3300 (61700 - 86000)	3700 (145.67)
Jaws depth, mm (in)	B	630 (24.80)	720 (28.45)
Max. jaws opening, mm (in)	C	565 (22.24)	670 (26.38)

	RSS58R	RSS80R
Working weight, stick mounted, kg (lb)	5880 (12960)	8265 (18220)
Working weight, boom mounted, kg	6000 (13230)	7900 (17420)
Operating pressure, bar (psi)	320-350 (4640-5075)	320-350 (4640-5075)
Oil flow range, l/min (gal/min)	275-375 (72.6-99.1)	500-600 (132.1-158.5)
Rotation working pressure, bar (psi)	100-115 (1450-1670)	140-150 (2030-2175)
Rotation oil flow, l/min (gal/min)	30-40 (7.9-10.6)	50-60 (13.2-15.9)
Carrier weight stick mounted, ton (lb)	51-65 (112400-187400)	70-90 (154300-198400)
Carrier weight boom mounted, ton (lb)	39-45 (86000-99000)	45-60 (99000-132300)

DIMENSIONS

Height, mm (in)	A	3950 (155.51)	4300 (169.29)
Jaws depth, mm (in)	B	780 (30.71)	840 (33.07)
Max. jaws opening, mm (in)	C	760 (29.92)	830 (32.68)

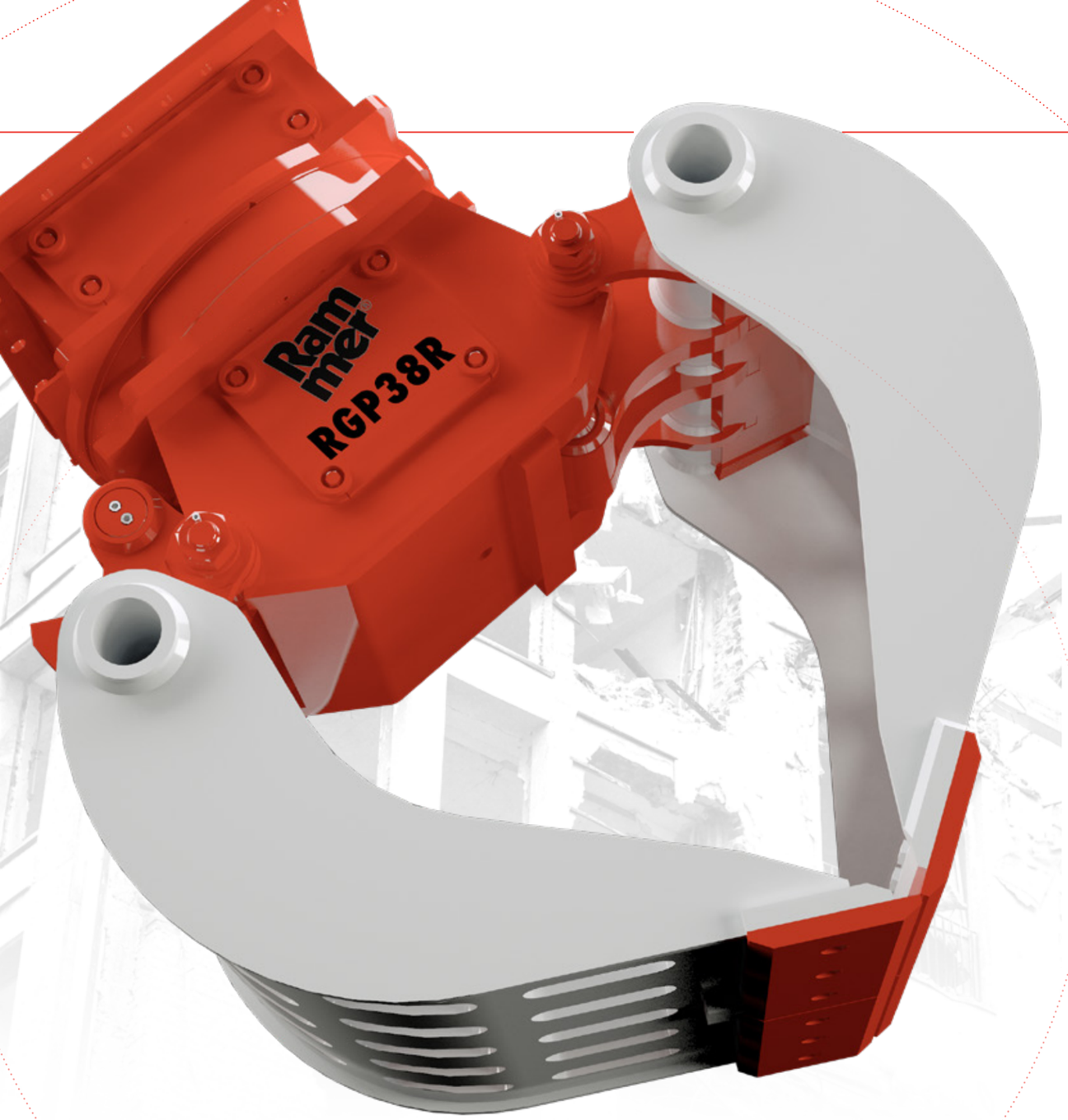

GRAPPLES

Rammer RGP Grapples have been designed and tested with demolition in mind. The RGP Grapples are suitable for demolition and material handling applications: robust for heavy work, but also accurate for picking and sorting applications. They offer large volume for bulk loading, making them equally ideal for waste handling applications.

SAFETY VALVE
Prevents material falling in the event of a hydraulic failure for enhanced safety.

MANUFACTURED FROM HB400 STEEL
High wear resistance of the components.
Equipment can work in most demanding conditions.

STROKE HYDRAULIC BRAKE
Components longer life due to less stress.
Less maintenance > lower owning and operating costs.

BOLT ON REPLACEABLE CUTTING BLADES
Can be turned to extend their life before replacing.
Less maintenance > lower owning and operating costs.

LIGHT AND STRONG ENOUGH
Can be used on soft and demanding appliccations such as demolition and recycling. Faster pay off.

EXTERNAL ACCESS FOR SERVICING
Faster service intervals
Less downtime > better productivity.

HARDENED BUSHINGS AND PINS
Higher wear resistance therefore longer life.
Lower owning and operating costs.

MECHANICAL CYLINDER STOPPERS
Avoids premature stress at cylinders
Lower owning and operating costs.

GRAPPLES

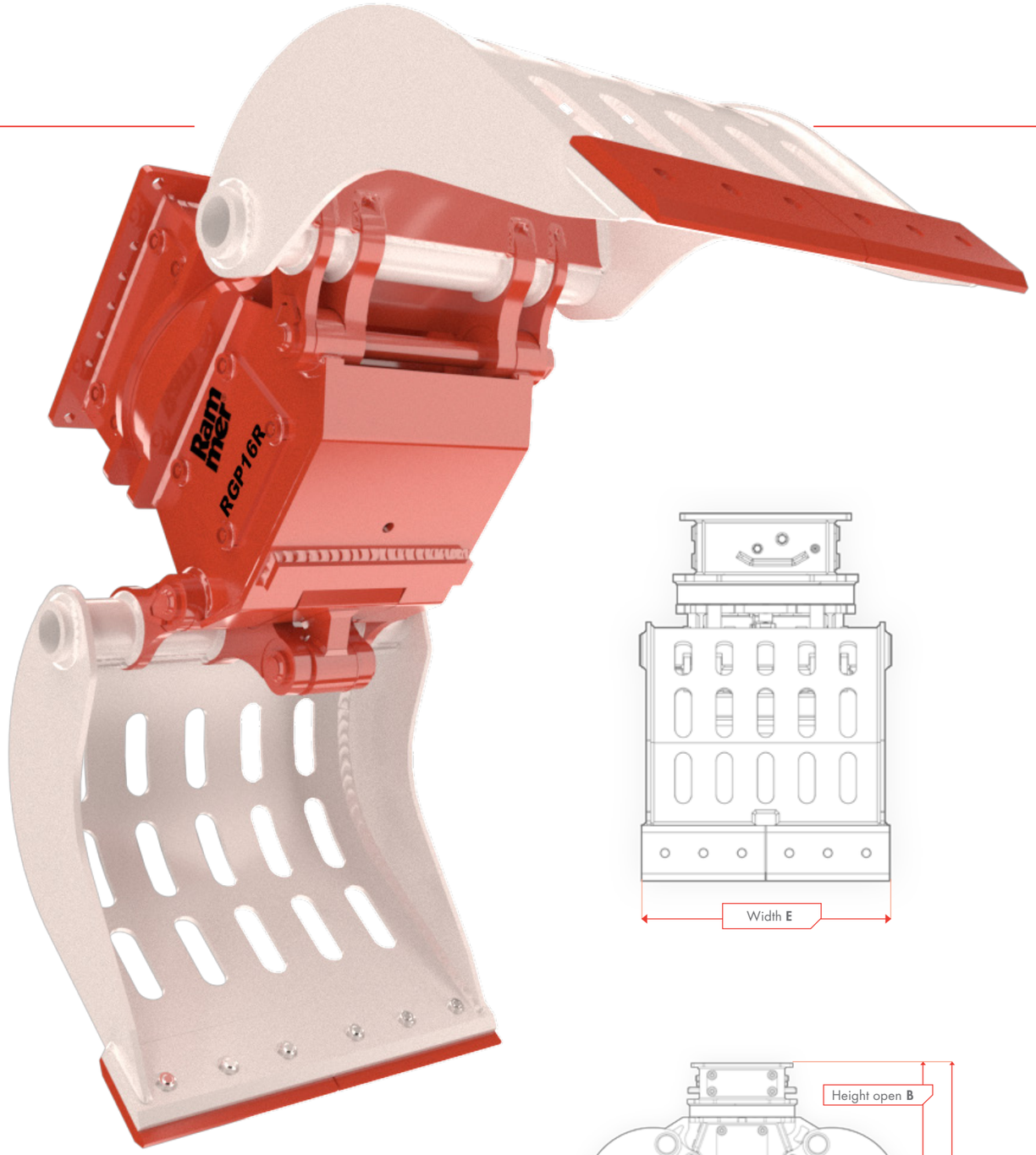

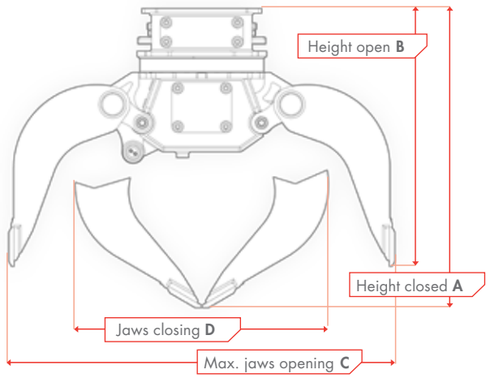

		RGP07R	RGP09R	RGP13R
Working weight, kg (lb)		620 (1370)	700 (1540)	820 (1810)
Capacity, liter (gal)		200 (52.93)	300 (79.25)	400 (105.67)
Working pressure, bar (psi)		200-250 (2900-3625)	250 - 300 (3625-4350)	300-320 (4350-4640)
Oil flow, l/min (gal/min)		20-30 (5.3-7.9)	20-30 (5.3-7.9)	20-30 (5.3-7.9)
Rotation oil pressure, bar (psi)		130-150 (1885-2175)	130-150 (1885-2175)	130-150 (1885-2175)
Rotation oil flow, l/min (gal/min)		15-20 (4.0-5.3)	15-20 (4.0-5.3)	15-20 (4.0-5.3)
Amount of motors		1	1	1
Carrier weight, ton (lb)		5-8 (11000-17600)	7-11 (15400-24300)	10-15 (22000-33100)
DIMENSIONS				
Height closed, mm (in)	A	1240 (48.82)	1310 (51.57)	1340 (52.76)
Height open, mm	B	1100 (43.31)	1130 (44.49)	1140 (44.88)
Max. jaws opening, mm (in)	C	1500 (59.06)	1650 (59.06)	1700 (66.93)
Jaws closing, mm (in)	D	1030 (40.55)	1090 (42.91)	1100 (43.31)
Width, mm (in)	E	600 (23.62)	600 (23.62)	800 (31.50)

		RGP16R	RGP18R	RGP20R
Working weight, kg (lb)		1330 (2930)	1400 (3090)	1480 (3260)
Capacity, liter (gal)		500 (132.09)	600 (158.50)	700 (184.92)
Working pressure, bar (psi)		300-350 (4350-5075)	300-350 (4350-5075)	300-350 (4350-5075)
Oil flow, l/min (gal/min)		50-60 (13.2-15.9)	50-60 (13.2-15.9)	50-60 (13.2-15.9)
Rotation oil pressure, bar (psi)		130-150 (1885-2175)	130-150 (1885-2175)	130-150 (1885-2175)
Rotation oil flow, l/min (gal/min)		30-40 (7.9-10.6)	30-40 (7.9-10.6)	30-40 (7.9-10.6)
Amount of motors		2	2	2
Carrier weight, ton (lb)		14-18 (30900-39700)	16-20 (35300-44100)	18-22 (39700-48500)
DIMENSIONS				
Height closed, mm (in)	A	1550 (61.02)	1550 (61.02)	1550 (61.02)
Height open, mm	B	1340 (52.76)	1340 (52.76)	1340 (52.76)
Max. jaws opening, mm (in)	C	2000 (78.74)	2000 (78.74)	2000 (78.74)
Jaws closing, mm (in)	D	1300 (51.18)	1300 (51.18)	1300 (51.18)
Width, mm (in)	E	750 (29.53)	900 (35.43)	1000 (39.37)

GRAPPLES

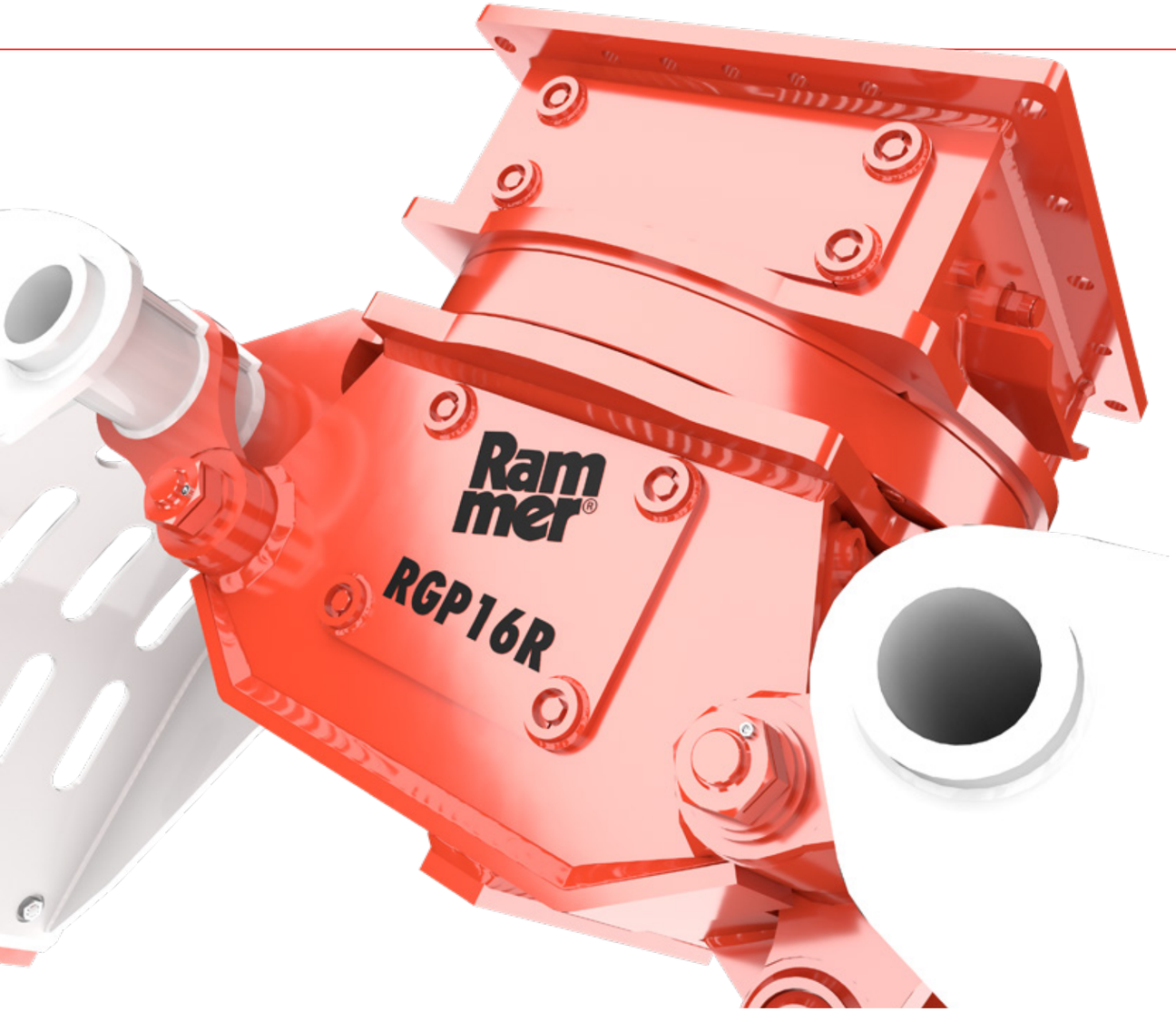

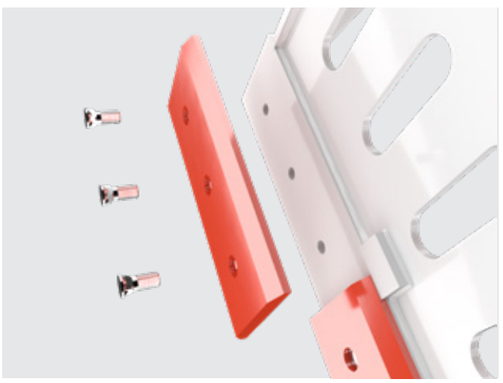

		RGP23R	RGP28R
Working weight, kg (lb)		1570 (3460)	2315 (5100)
Capacity, liter (gal)		800 (211.34)	900 (237.75)
Working pressure, bar (psi)		300-350 (4350-5075)	300-350 (4350-5075)
Oil flow, l/min (gal/min)		50-60 (13.2-15.9)	70-80 (18.5-21.1)
Rotation oil pressure, bar (psi)		130-150 (1885-2175)	130-150 (1885-2175)
Rotation oil flow, l/min (gal/min)		30-40 (7.9-10.6)	30-40 (7.9-10.6)
Amount of motors		2	2
Carrier weight, ton (lb)		21-25 (46300-55100)	25-30 (55100-66100)
DIMENSIONS			
Height closed, mm (in)	A	1600 (62.99)	1745 (68.70)
Height open, mm	B	1370 (53.94)	1490 (58.66)
Max. jaws opening, mm (in)	C	2100 (82.68)	2230 (87.80)
Jaws closing, mm (in)	D	1430 (56.30)	1400 (55.12)
Width, mm (in)	E	1000 (39.37)	1200 (47.24)

		RGP33R	RGP38R
Working weight, kg (lb)		2530 (5580)	2610 (5750)
Capacity, liter (gal)		1000 (264.17)	1100 (290.59)
Working pressure, bar (psi)		300-350 (4350-5075)	300-350 (4350-5075)
Oil flow, l/min (gal/min)		70-80 (18.5-21.1)	70-80 (18.5-21.1)
Rotation oil pressure, bar (psi)		130-150 (1885-2175)	130-150 (1885-2175)
Rotation oil flow, l/min (gal/min)		30-40 (7.9-10.6)	30-40 (7.9-10.6)
Amount of motors		2	2
Carrier weight, ton (lb)		30-35 (66100-77200)	35-40 (77200-88200)
DIMENSIONS			
Height closed, mm (in)	A	1770 (69.68)	1770 (69.68)
Height open, mm	B	1500 (59.05)	1500 (59.05)
Max. jaws opening, mm (in)	C	2285 (88.19)	2240 (88.19)
Jaws closing, mm (in)	D	1420 (55.91)	1455 (57.28)
Width, mm (in)	E	1300 (51.18)	1350 (53.15)

MULTIPROCESSORS

SPEED VALVE
Shorter working cycles increase productivity

REVERSED CYLINDER RODS
Cylinder is protected even when fully extended

FOUR DIFFERENT JAWS DESIGN
Enabling it to work on primary and secondary demolition as well as processing scrap for recycling purposes

REPLACEABLE CUTTING BLADES
Allows inside rebar processing threfore reducing flame cutting needs which reduces o&o costs

MANUFACTURED OF HB400 STEEL
Highly resistant material to work on concrete

HYDRAULIC ROTATION WITH PROTECTION VALVE
The protected rotation system allows precision tool placement, lowering/reducing owning and operating costs.

FOUR DIFFERENT JAWS DESIGN
Enabling it to work on primary and secondary demolition as well as processing scrap for recycling purposes.

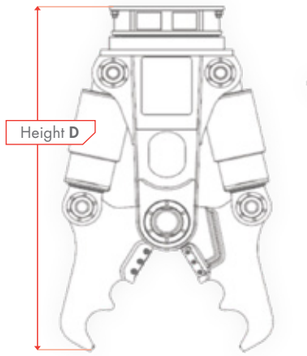

CUTTER CRUSHER JAWS

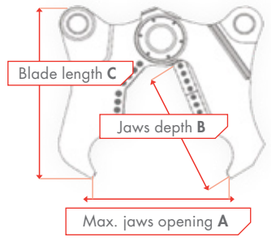

PULVERIZER JAWS

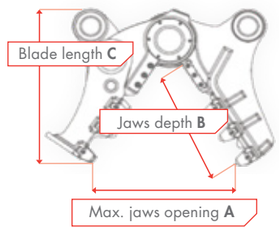

SCRAP SHEAR JAWS

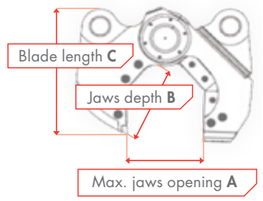

RMP18R

Working weight, kg (lb)	1650 (3640)
Operating pressure, bar (psi)	320-350 (4640-5075)
Oil flow, l/min (gal/min)	130-150 (34.3-39.6)
Rotation working pressure, bar (psi)	90-100 (1305-1450)
Rotation oil flow, l/min (gal/min)	30-40 (7.9-10.6)
Carrier weight range, ton (lb)	15-21 (33100-46300)

DIMENSIONS		CUTTER CRUSHER JAWS
Max. jaws opening, mm (in)	A	750 (29.53)
Jaws depth, mm (in)	B	675 (26.57)
Blade length, mm (in)	C	160 (6.3)
Height, mm (in)	D	1860 (73.23)
Working weight, kg (lb)		1650 (3640)

		PULVERIZER JAWS
Max. jaws opening, mm (in)	A	650 (25.59
Jaws depth, mm (in)	B	600 (23.62)
Blade length, mm (in)	C	160 (6.3)
Height, mm (in)	D	1830 (72.05)
Working weight, kg (lb)		1700 (3750)

		SCRAP SHEAR JAWS
Max. jaws opening, mm (in)	A	330 (12.99)
Jaws depth, mm (in)	B	475 (18.7)
Blade length, mm (in)	C	200 (7.87)
Height, mm (in)	D	1800 (70.87)
Working weight, kg (lb)		1700 (3750)

CUTTING WITH SCRAP SHEAR JAWS

Rod mm (in)	●	45 (1.77)
Pipe mm (in)	○	N/A
IPE mm (in)	I	200 (7.87)
HEA mm (in)	H	140 (5.51)
HEB mm (in)	H	N/A
Plate mm (in)	▬	10 (0.39)
L profile mm (in)	L	N/A

FIRST CLASS SERVICE AND SUPPORT

Original spare parts

As a leading supplier to the demolition and recycling industry for many years we are conscious of the need for high quality spare parts. Utilizing our efficient central warehousing and advanced logistics linked to a global dealer and distributor network, we ensure that you will get the right parts in the right place at the right time - minimizing the downtime and lowering your owning, operating and running costs.

Trained service personnel

Rammer products are renowned for quality, performance and reliability but when your Rammer product shows signs of natural wear, or the unexpected happens, our professional dealer service personnel are highly-trained, qualified and experienced which ensures that you are never more than a phone call away from a Rammer expert.

DEMOLISHING WITH RPV29R

RVP29R and its large openings within the fixed jaw allow for easy material removal as it is processed. Fitted with a single tooth top plate allows for better penetration when undertaking primary demolition tasks.

One of the largest and well known demolition companies in the North West of England, Bradley Demolition from Preston, have vast experience of a wide range of demolition attachments from most major manufacturers and already operate several Rammer hydraulic hammers within their fleet.

The RPV29R rotating pulverizer was purchased specifically for the primary demolition along with the processing of demolition arisings on a project in York where the company have been employed to demolish a former college complex.

For this particular project, the 2.9 tonne, 2.4m tall pulveriser was matched to a new Hitachi ZX300-6 excavator. As with all excavators on the Bradley Demolition fleet, the Hitachi was fitted with a Lehnhoff fully hydraulic quick coupler and was swiftly put to work on processing masonry from the downed building.

The best in class

Constructed from high wear resistant steel, the RVP29R incorporates a reinforced jaw area to increase the longevity of the attachment. With a jaw opening width of 900mm the RVP29R ranks amongst the best in its class and is fitted with replaceable rebar cutters within the throat of the tool. The jaw has been designed to house interchangeable plates to increase productivity and allow for fast and easy maintenance. Large openings within the fixed jaw allow for easy material removal as it is processed. Fitted with a single tooth top plate allows for better penetration when undertaking primary demolition tasks. A patented speed valve inside the body of the attachment allows for faster cycle times, improves productivity and efficiency. The speed valve has the added benefit of protecting the hydraulic circuit from any peaks in pressure. The RVP29R requires just 200-220 litres of oil per minute to function meaning oil temperature is kept to a minimum

Without the worry

With the RVP29R being fitted with a Lehnhoff coupler, there was a distinct lack of trailing hydraulic hoses which meant the operator was able to process material at a much faster rate. The 550mm wide jaws combined with a depth of 850mm meant that large pieces of masonry were handled with ease. The very quick operation of the jaws also meant that the excavator operator was able to concentrate on positioning the attachment without the worry of the material moving around in the jaws.

Bradley Demolition are extremely pleased with their new acquisition from UK Rammer dealer Murray Plant with their operator pleased with the speed of operation and build quality of the Rammer product.

GLOBAL DEALER NETWORK

Sandvik sells and supports its Rammer-branded products through a global dealer network that operates in 130 countries around the world.

YOUR LOCAL RAMMER DEALER

Sandvik Mining and Construction Oy
Taivalkatu 8, P.O.Box 165
FI- 15101 Lahti, Finland
Phone Int. +358 205 44 151
www.rammer.com