KOMATSU

D175AX-10



Crawler dozer

Engine power
337 kW / 452 HP @ 1900 rpm

Operating weight
45500 kg

Blade capacity
10.6 m^3 (Semi-U blade)

D175AX-10



Increased productivity

in slot dozing, compared to D155AX-8



Increased fuel efficiency

in slot dozing, compared to D155AX-8

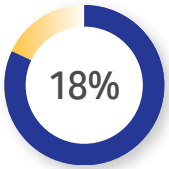

Increased drawbar pull

compared to D155AX-8



Engine power
337 kW / 452 HP @ 1900 rpm

Operating weight
45500 kg

Blade capacity
10.6 m^3 (Semi-U blade)

Power meets innovation

The next generation bulldozer

Power & productivity

- 27% more powerful next-generation DBA127 engine, compliant with EU Stage V and EPA Tier 4 Final
- Class-leading steering performance for exceptional maneuverability and productivity
- New transmission delivers higher efficiency, smoother shifting, and improved machine control
- Advanced new Semi-U blade design with 13% increased capacity



Smart control features

- Adaptive powertrain & steering control
- Smooth direction change
- Track shoe slip control mode
- Multi-stage speed control
- Blade auto pitch & ripper auto functions

First-class comfort

- Completely redesigned, enhanced operator environment
- Premium comfort operator seat
- High-definition touchscreen with intuitive navigation and additional sub-monitor
- Keyless start with operator identification system
- Advanced Palm Command Control System (PCCS) levers
- Enhanced ride comfort with new 8-roller track frame & optimised bogie suspension

Reliability & maintenance

- Greatly extended service intervals
- Conveniently grouped service points
- Easy-to-clean cooling system
- Fluid level check function
- Reinforced main frame and track frames
- Komatsu Care program (regional differences apply)

Safety first

- Safe & easy access
- KomVision surround view system
- LED lighting system
- Coming home light function
- Operator Presence Sensing system

Digital assistance & guidance

- Komtrax – Komatsu wireless monitoring system
- Smart Construction 3D Machine Guidance Flex (option)



More power. More productivity. Greater efficiency.

Powered by a newly developed high-horsepower engine, advanced 4-speed transmission, and redesigned high-capacity Semi-U blade, the D175AX-10 delivers outstanding performance. Benefit from up to 25% higher slot dozing productivity and 15% improved fuel efficiency. With an average 18% increase in drawbar pull, the D175AX-10 delivers stronger pushing force, faster cycle times, and more efficient material handling (vs. D155AX-8).

High efficiency & large capacity Semi-U dozer

The newly developed 10.6 m^3 Semi-U dozer delivers 13% greater blade capacity while retaining the exceptional digging and soil transport capabilities of the current blade. Lower digging resistance enables smoother operation and improves overall dozing efficiency.



Power & productivity

New next generation engine

The Komatsu DBA127 engine delivers significantly higher engine power, providing dependable torque for demanding heavy-duty applications and maintaining consistent performance even in the toughest working environments. Advanced control technologies ensure peak engine efficiency, delivering optimum fuel economy and reduced emissions under all working conditions.

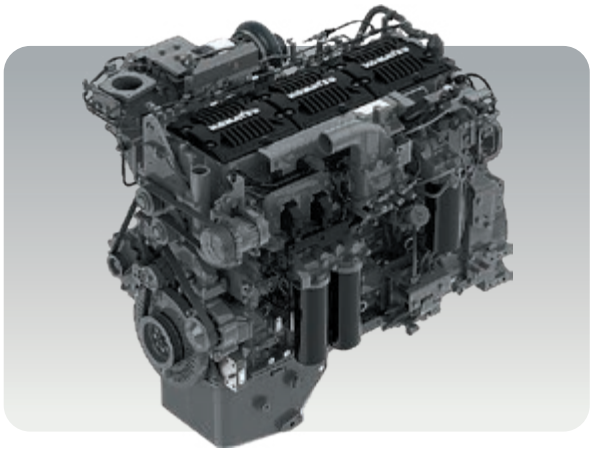

New 4-speed transmission

The redesigned 4-speed transmission with lock-up clutch improves fuel efficiency while optimizing power transfer across a wider operating range. The lock-up system minimizes power loss, ensuring maximum engine output is transferred directly to the ground for improved machine performance. Newly added 1.5-speed gearing and a faster 2.0-speed range deliver smoother shifting, improved controllability, and greater efficiency during demanding high-output operations.

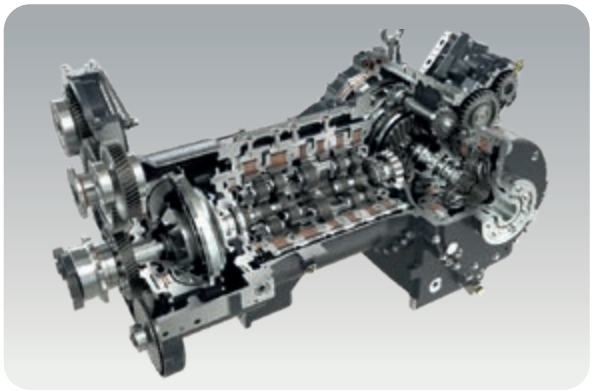

Class-leading steering performance

The advanced steering system combines power turn, pivot turn and counter turn functions to deliver outstanding manoeuvrability and maximise productivity. Steering force has increased by up to 13%, providing stronger turning performance and greater dozing efficiency. Pivot turn and counter turn improve side-cutting performance and enable fast direction changes in confined spaces with a minimal or zero turning radius, allowing operators to select the ideal turning mode for every application.

New Hydrostatic Steering System (HSS)

The enhanced HSS integrates a steering clutch, enabling pivot turn functionality for improved manoeuvrability. Electronic clutch and brake control ensures safe pivot turns, even on slopes. Supported by the HSS motor, high-speed pivot turns are achieved while minimising track slip, maintaining machine stability and control.

Power management automatically balances engine power between steering and work equipment systems, ensuring smooth operation and consistent performance even under simultaneous high-demand conditions. A dedicated steering pump provides rapid response and powerful turning performance, even during heavy blade operation. The new engine delivers an average of 7% more power while turning.



Power turn

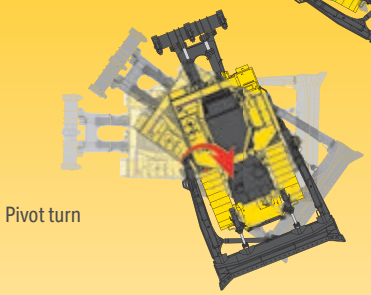

Pivot turn

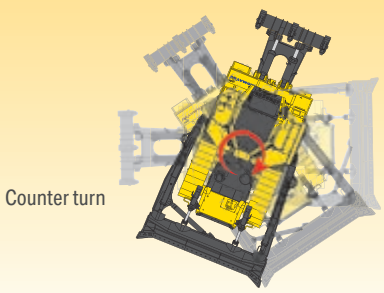

Counter turn

Smart control features

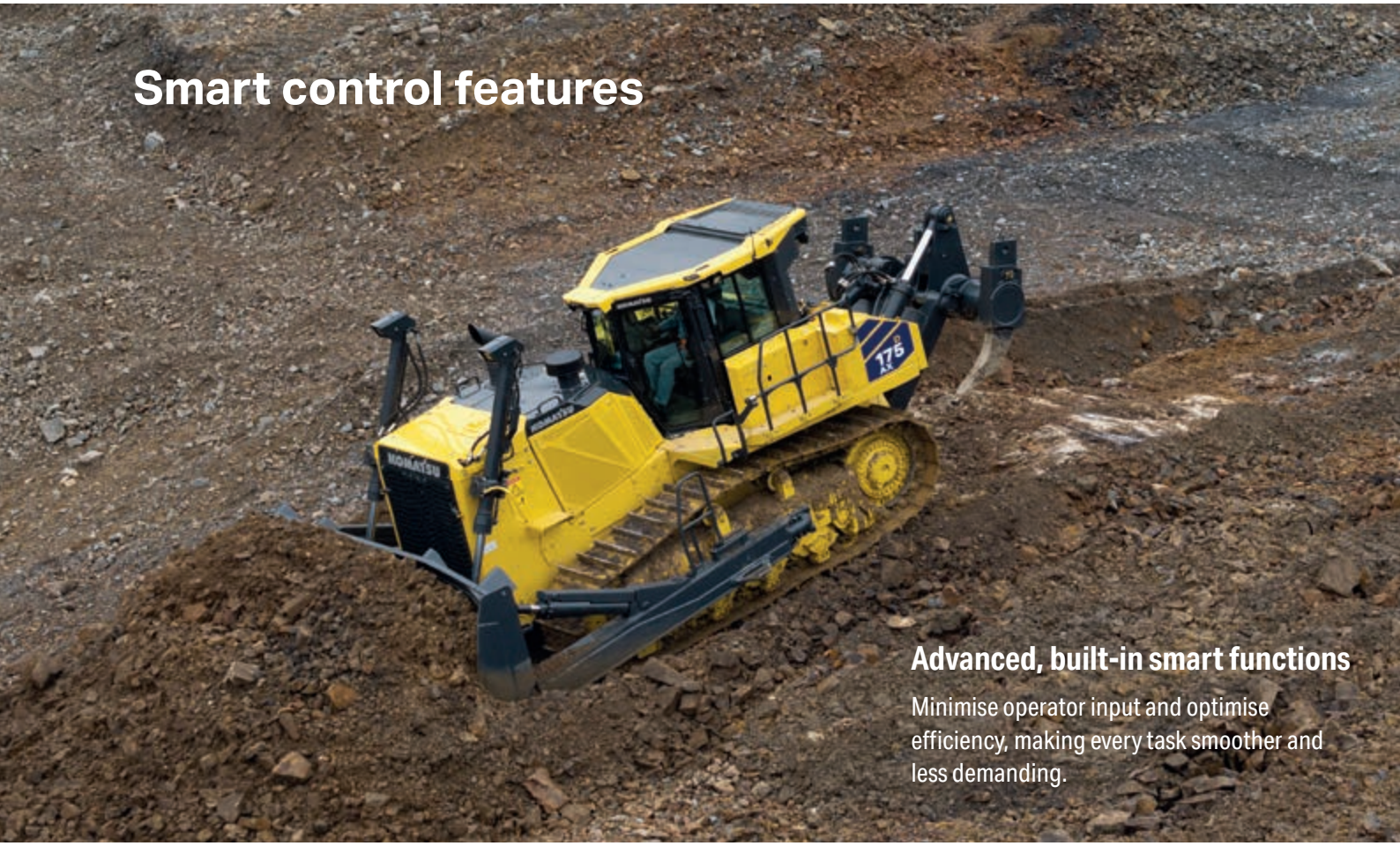

Advanced, built-in smart functions

Minimise operator input and optimise efficiency, making every task smoother and less demanding.

Adaptive powertrain and steering control

An Inertial Measurement Unit (IMU), together with multiple sensors, continuously monitors machine conditions, including slope angle and load, enabling smooth, responsive shifting and precise steering transitions. Electronically synchronised transmission and steering valves provide stable gear changes and seamless transitions between power-turn and pivot-turn modes, maintaining smooth operation even under heavy loads and demanding terrain conditions.

Smooth direction change

Automatically adjusts braking and acceleration during forward-reverse transitions, preventing rollback and ensuring smooth gear changes, even when operating on slopes.

Neutral auto brake

Automatically applies optimal braking force for smooth, shock-free stops. Brakes remain engaged after stopping and release when starting, significantly reducing the need for brake pedal operation and improving safety across all terrains.

Torque converter efficiency control

In automatic shift mode, lock-up improves transmission efficiency. In manual shift mode, lock-up is disabled, but fuel efficiency is maintained by releasing the stator clutch under light-load conditions. This system optimises fluid coupling behaviour and contributes up to 5% fuel savings.



Track shoe slip control mode

Detects track shoe slip during ripping and reduces engine speed to maintain traction. The IMU sensor also detects ripper tip slippage on rock surfaces, applying slip control for improved performance. Less need for decelerator pedal input reduces operator fatigue, lowers fuel consumption, and extends undercarriage life.



Directional gear presets

Up to three preferred forward and reverse gear combinations can be pre-set and stored for quick access. A selected pattern can be recalled using the lever switch, reducing gear shift operations and enabling more efficient use of the entire 30-speed range.

Multi-stage speed control

30 speed settings are selectable through engine speed and the 4-speed transmission. Low-speed travel operation is possible without decelerator pedal input, allowing operators to remain focused on the task at hand.



Ripper auto functions

Repetitive lever operations are reduced through two smart features, auto return and auto stow. Auto return raises the ripper and fully tilts the shank back with a single switch press, while auto stow raises the ripper and returns the shank to its fully retracted position. Both functions operate independently of travel direction, improving operator convenience, reducing fatigue, and increasing overall productivity.



Blade auto pitch

For machines equipped with dual-tilt blades, blade auto pitch automatically adjusts blade position to reduce operator effort and maximise dozing efficiency. During dozing, the blade is set to the full dump position and automatically returns to the digging position when reversing. With one-touch activation, blade control wheel adjustments are no longer required, reducing operator workload and improving productivity.

First-class comfort

Completely redesigned, enhanced operator environment

The front screen has been enlarged without compromising the cab frame's strength, delivering excellent visibility and an enhanced sense of openness. The monitor and switch layout has been completely updated to reduce the hand and eye movement required by the operator during machine operation. All control switches are positioned close to their respective control levers. Frequently used switches are conveniently placed within easy reach, minimising operator movement during operation.



Optimised monitor layout

The main monitor and optional sub-monitor are positioned on the operator's right-hand side, allowing the operator to check the display easily whether facing the front or rear of the machine. The monitor is operated via an intuitive touch panel interface.



Excellent, wide rear visibility

Optimising the position of the rear pillars and converting the rear window into a bay window has improved visibility to the rear. Positioning the operator's seat and lever console on the right side at a 12° angle allows the operator to work in a comfortable posture while checking the rear, such as during ripper work.





An all-new cab

The newly designed cab maximises visibility and operator control through a wider field of view, ergonomically optimised controls, and intuitive operation for safer, smoother, and more efficient performance.

First-class comfort



Fully adjustable side consoles

The left and right control levers and armrests can be easily adjusted for forward/back position and height using intuitive controls located within easy reach. Electronic height adjustment ensures convenient operation, while independent armrest adjustment allows personalised positioning for enhanced operator comfort.

Premium comfort operator seat

A fully adjustable operator seat provides optimum comfort and support. Air suspension reduces vibrations and helps minimise operator fatigue during extended operation. Integrated heating and ventilation ensure year-round comfort, while an ergonomic cushion evenly distributes body pressure. Adjustable suspension damping allows additional personalised comfort settings.



Newly developed climate control

An advanced climate control system combines coordinated operation of the ceiling-mounted air conditioning unit and foot heater to maintain a comfortable cab environment. During cooling, airflow is directed to the operator's upper body from both the front and rear, while heating provides warmth from the feet upward for improved comfort. The fully automatic air conditioning system continuously optimises air vent mode, airflow and temperature for consistently comfortable operating conditions.

High-performance fresh air filter

This filter effectively captures fine airborne dust particles and complies with the OSHA silica standard for cab air intake filtration requirements (MERV 16).



New cab damper mount

A newly upgraded cab damper mount with an extended stroke design delivers excellent shock and vibration absorption during travel. By effectively isolating the cab from the machine body, vibration and noise are significantly reduced, creating a more comfortable operating environment for the operator.



Roller blinds

Adjustable roller blinds can be set to two positions, allowing the operator to reduce sunlight exposure and maintain a more comfortable working environment.

Enhanced storage space and accessory options

Multi-functional utility bars allow easy installation of personal accessories, while 12/24 V outlets and USB ports provide convenient charging for electronic devices. Numerous practical storage solutions help to keep the workspace organised. A microphone is fitted as standard, enabling hands-free calls via Bluetooth®.



1. USB charger (type A)
2. Smartphone holder
3. Cup holder
4. Storage space
5. 12 V power supply
6. Storage space
7. Cup holder
8. Coat hook (left and right)
9. USB charger (type C)
10. 12 V power supply
11. Utility bar (left and right)
12. Footwell storage pocket
13. Glove box

Ride comfort



Equaliser bar shoulder pad

The shoulder pad on the equaliser bar provides smoother machine behaviour when travelling over obstacles. In addition, the reduced oscillation angle helps minimise machine rolling behaviour. Together, these features improve operator comfort during rough terrain operation.

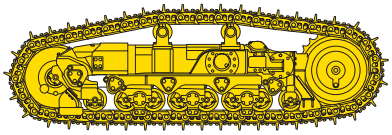

New 8-roller track frame

The new 8-roller track frame extends the track-length on-ground by 114 mm, resulting in improved chassis stability, enhanced grading performance and greater operator comfort.



Optimised bogie suspension

The undercarriage bogie structure has been optimised, with an increased rocking angle that improves machine performance on uneven ground. In addition, a swinging idler enhances operator comfort by reducing impact shocks when travelling over obstacles and during landing.

User interface

High-definition touchscreen with intuitive navigation

The 8-inch touchscreen is ergonomically positioned for effortless fingertip access and intuitive operation. Shortcut buttons for core functions ensure fast navigation, while the clear display provides excellent visibility at a glance. The interface also integrates climate control, DAB radio, and Bluetooth® media and phone connectivity.

A standard-equipped, high-resolution 10-inch touch panel sub-monitor provides clear display of KomVision bird's-eye-view screens for enhanced operator visibility.



Operator ID and keyless start

This machine is designed to adapt effortlessly to the individual preferences of every operator. Up to 50 individual users can store their personal settings using Operator ID, with preferences automatically recalled at startup. The ID is accessed through code entry or a Bluetooth® key, which also allows for a secure, keyless start. Stored settings include basic preferences such as joystick configuration, work equipment speed, and the selected working mode at startup.



PCCS travel control lever with newly integrated FNR switch and horn control button

Advanced Palm Command Control System (PCCS) levers

Reduced lever operating effort and shorter lever stroke provide smooth, stress-free operation with precise control. An improved knob design ensures intuitive operation of the newly integrated FNR switch, allowing forward, neutral and reverse to be selected easily using only the thumb. By eliminating conventional lever movements and reducing arm motion, operator fatigue is minimised while work efficiency is improved. The horn can also be activated without the operator removing a hand from the controls.



PCCS work equipment control lever



Finger command ripper control system

The hand grip allows the operator to hold on with one hand during ripping operations, while controlling the ripper with their fingertips.

Digital assistance & guidance

KOMTRAX

The way to higher productivity

Komtrax turns telematics data into actionable insights for your fleet and equipment, empowering your business to make well-informed, data-driven decisions. By creating a tightly integrated web of support, Komtrax allows for proactive and preventive maintenance to minimise downtime and facilitate peak machine performance.

Smart Construction
3D Machine Guidance Flex

Bring affordable 3D track guidance to your entire fleet, no matter the make or model. This cost-effective aftermarket system installs easily to give operators real-time visual height comparisons against the digital design right inside the cab, eliminating guesswork to drastically boost grading and overburden removal efficiency. As they work, the system automatically captures high-density as-built data, continuously feeding your site's digital twin with accurate progress updates to keep the office perfectly synced with the field.

Tough, reliable and easy to maintain







Simple and convenient service

Daily service and maintenance checks for filters and fluids can be carried out safely and efficiently, with all service points conveniently grouped and accessible from either ground level or safe walkways. Wide, side-opening engine covers enable convenient access. Sampling ports for oil and coolant are integrated, enabling quick and easy fluid sampling.

Easy-to-clean cooling system

A foldable front mask and a swing-out fan provide easy access, while the side-by-side layout allows quick and efficient cleaning of the cooling cores.



Sampling ports for engine oil, coolant, power train oil and hydraulic oil

Easy cab removal

With no need for refrigerant recovery, coolant draining, or fuel tank removal, the time spent to remove the cab is reduced considerably, minimising downtime.



Fluid level check function

Early detection of low coolant and oil levels helps reduce the risk of operational issues and failures.





New mono blade linkage

This structure reduces blade sway movement and extends the maintenance interval for the blade joint.



Reinforced main frame

The reinforced main frame improves durability and extends service life to 150% of the previous model.

Extended service intervals

Further extension of service intervals reduces maintenance interruptions, lowers operating costs, and reduces environmental impact.

Service intervals:
Engine oil, engine oil filter, fuel pre-filter and powertrain oil filter change: 1000 h
Final drive oil change: 2000 h
Hydraulic oil and filter change: 6000 h
KDPF cleaning: 8000 h

Komatsu Care

Komatsu Care is a complimentary customer support program that comes with your new Komatsu machine. Depending on the region, it may include maintenance and/or an additional warranty. Please contact your local distributor for details.



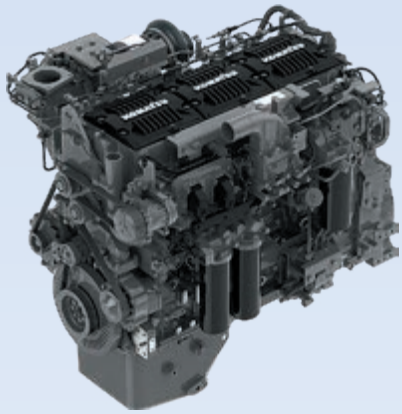

Advanced engine component durability

Key engine components of the next-generation Komatsu engine, including cylinder blocks, crankshafts and pistons, were reviewed with a focus on material selection and structural design. As a result, strength was significantly improved, extending engine life by 33% and delivering higher overall durability. In addition, the adoption of the latest technologies improved overall engine performance while maintaining the same noise level as the previous engine.

Delayed engine shutdown

Allows cooling to continue after the ignition is turned off if the engine or aftertreatment system is still hot. The engine and main power shut off automatically once safe temperatures are reached.



Optimal jobsite safety

Safety features on the D175AX-10 comply with the latest industry standards and work in synergy to minimise risks to people around the machine. Inside the cab, features such as the operator presence-sensing system detect when the operator seat is unoccupied and automatically lock the hydraulics, preventing unintended machine movement.





Safe & easy access

A large handrail provides safe and convenient access when entering or exiting the machine. The flat, wide walkway, combined with secure handrail protection, helps ensure safe movement at all times.

KomVision surround view system

Using four cameras mounted at the front, rear, left, and right of the machine, KomVision displays a bird's-eye view of the surrounding area on the monitor. The display can be easily switched between a bird's-eye view, a combined bird's-eye and single-camera view, and individual camera views, making it easier to identify approaching people or objects during machine start-up and operation. In addition, KomVision provides an expanded view of the area in front of the blade, which is difficult to see directly, allowing operators to confirm terrain conditions on slopes and near edges in advance, significantly improving operational safety.







This system cannot fully cover or display every area around the machine, requiring operators to remain aware of surroundings at all times.

Safety first



LED lighting system

Long life, high lumen LED lights are standard on the machine. They are ideally positioned to give an optimal illumination of the work area.



Ground-level switches

Easy ground-level access to both the battery disconnect switch and the coming home light switch enhances safety while improving convenience during everyday machine operation.

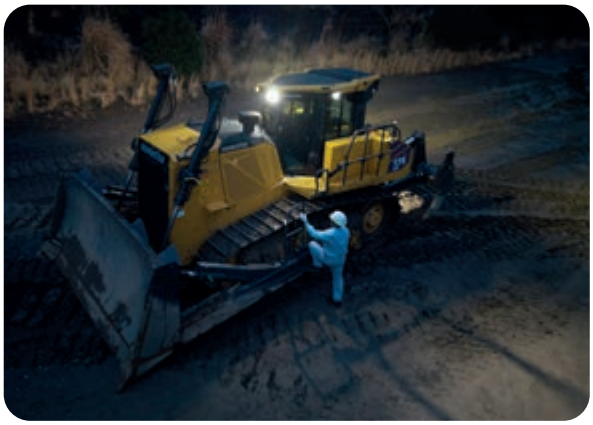

Coming home light function

When the machine detects the electronic key or the operator unlocks the cab door, the working lamps automatically switch on, allowing safe boarding. After the cab door is closed and the operator exits, the lamps remain illuminated for a programmable period to ensure safe disembarkation.

Seat belt reminder system

This adjustable system combines a visual and audible alarm in the cab with an external lamp to increase jobsite safety. The green external lamp indicates to anyone outside whether or not the seat belt is worn by the operator.



Tie-off points

Tie-off points have been installed for connecting workers' safety belts during maintenance and cleaning tasks, ensuring secure operations.



Specifications

Engine

Model	Komatsu DBA127
Type	Common rail direct injection, water-cooled, emissionised, turbocharged, aftercooled diesel
Engine power	
at rated engine speed	1900 rpm
ISO 14396	337 kW / 452 HP
ISO 9249 (net engine power)	336 kW / 450 HP
No. of cylinders	6
Bore × stroke	130 mm × 160 mm
Displacement	12.74 l
Fan drive type	Hydraulic, reversible
Lubrication system	
Method	Gear pump, force lubrication
Filter	Full-flow
Fuel	Diesel fuel, conforming to EN590 Class 2/Grade D. Paraffinic fuel capability (HVO, GTL, BTL), conforming to EN 15940:2016

TORQFLOW transmission

Komatsu's automatic TORQFLOW transmission consists of a water-cooled, 3-element, 1-stage, 2-phase torque converter with lockup clutch, and a planetary gear, multiple-disc clutch transmission which is hydraulically actuated and force-lubricated for optimum heat dissipation. Gearshift lock lever and neutral safety switch prevent machine from accidental starts.

Max. travel speeds

Gear	Forward	Reverse
1st	3.7 km/h	4.9 km/h
1.5th	5.0 km/h	6.6 km/h
2nd	6.8 km/h	8.8 km/h
3rd	11.4 km/h	14.9 km/h

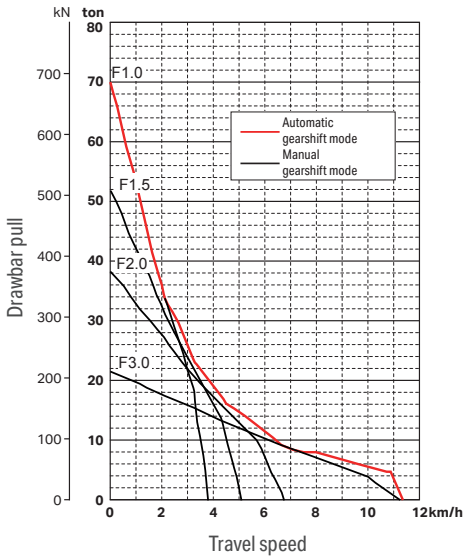

Final drive

Type	Double-reduction, spur and planetary final drives increase tractive effort
Sprocket	Segmented sprocket teeth are bolt-on for easy replacement

Steering system

Type	Hydrostatic Steering System (HSS)
Steering control	PCCS-lever
Minimum turning radius (counter-rotation) as measured by track marks on ground*	1.07 m

*Theoretical value during pivot turn

Undercarriage

Suspension	Oscillation-type with equaliser bar and forward mounted pivot shafts
Track roller frame	Monocoque, high-tensile-strength steel construction
Komatsu Bogie (K-Bogie) undercarriage	Lubricated track rollers are resiliently mounted to the track frame with a bogie suspension system whose oscillating motion is cushioned by rubber pads.
Track shoes	Lubricated tracks. Unique dust seals for preventing entry of foreign abrasives into pin-to-bushing clearance for extended service. Track tension easily adjusted with grease gun.
Number of shoes (each side)	43
Grouser height	80 mm
Track rollers (each side)	8
Carrier rollers (each side)	2
Shoe width (standard/max.)	610 mm / 710 mm
Ground contact area (ISO 16754)	41346 cm^2
Ground pressure (ISO 16754) (tractor only, including ROPS cab)	82.8 kPa / 0.84 kgf/cm^2

Shoes (optional)

	Additional mass	Ground contact area
610 mm single grouser shoes	0 kg	41346 cm^2
710 mm single grouser shoes	+440 kg	48124 cm^2
560 mm extreme grouser shoes	+210 kg	37957 cm^2
610 mm extreme grouser shoes	+460 kg	41346 cm^2
660 mm extreme grouser shoes	+720 kg	44735 cm^2

Operating weight (appr.)

Including rated capacity of lubricant, coolant, full fuel tank, operator and standard equipment (including ROPS cab)	
Tractor weight	34930 kg
Including strengthened dual tilt Semi-U dozer, multi-shank ripper, ROPS cab, operator, standard equipment, rated capacity of lubricant, coolant, and full fuel tank.	
Operating weight	45500 kg
Ground pressure	107.9 kPa / 1.10 kgf/cm^2

Service refill capacities

Fuel tank	625 l
Radiator	95 l
Engine oil	49 l
Damper	1.6 l
Hydraulic tank	90 l
Final drive (each side)	31 l
AdBlue® tank	76 l
Semi-U tilt dozer (refill)	145 l
Multi-shank ripper (additional volume)	37 l
Giant ripper (additional volume)	37 l

Environment

Engine emissions	Fully complies with EU Stage V exhaust emission regulations
Noise levels	
LwA external	115 dB(A) (2000/14/EC Stage II)
LpA operator ear	80 dB(A) (ISO 6396 dynamic test)
Vibration levels (EN 12096:1997)	
Hand/arm	≤ 2.5 m/s^2 (uncertainty K = 0.86 m/s^2)
Body	≤ 0.5 m/s^2 (uncertainty K = 0.28 m/s^2)
Contains fluorinated greenhouse gas HFC-134a (GWP 1430). Quantity of gas 0.8 kg; CO2 equivalent 1.14 t	

Hydraulic system

Type	CLSS (closed-centre load sensing system)
All spool valves externally mounted beside the hydraulic tank	
Maximum pump flow	
for implement	225 l/min
for steering	345 l/min
Relief valve setting	
for implement	291 kgf/cm^2
for steering	403 kgf/cm^2
Spool control valve positions	
Blade lift	Raise, hold, lower, and float
Blade tilt	Right, hold, and left
Additional control valve positions for ripper	
Ripper lift	Raise, hold, and lower
Ripper tilt	Increase, hold, and decrease
Hydraulic cylinders	Double-acting, piston
No. of cylinders × bore	
Blade lift	2 × 110 mm
Blade tilt	2 × 160 mm
Ripper lift	1 × 180 mm
Ripper tilt	1 × 200 mm

Specifications

Machine dimensions

A	4130 mm
B	2140 mm
C	3470 mm
D	1815 mm
E	3389 mm
F	8610 mm
G	2750 mm
H	880 mm
I	970 mm
J	3485 mm

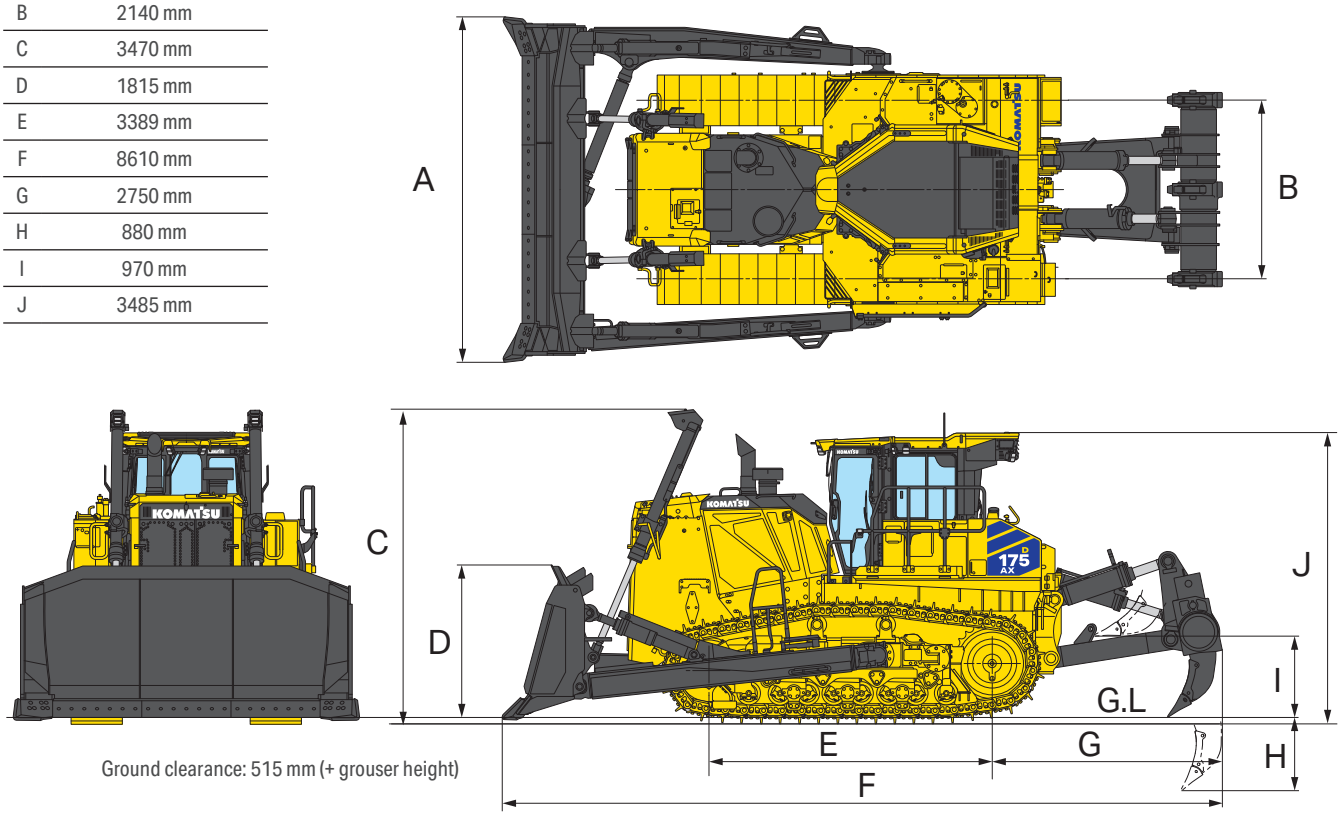

Ground clearance: 515 mm (+ grouser height)

Variable multishank ripper

Type	Hydraulically controlled parallelogram ripper; digging angle infinitely adjustable
No. of shanks	3
Weight (including hydraulic control unit)	4080 kg
Beam length	2320 mm
Standard digging angle*	44°
Max. lift above ground	970 mm
Max. digging depth	880 mm

Variable giant ripper

Type	Hydraulically controlled parallelogram ripper; digging angle infinitely adjustable
No. of shanks	1
Weight (including hydraulic control unit)	3310 kg
Beam length	1400 mm
Standard digging angle*	44°
Max. lift above ground	970 mm
Max. digging depth	1215 mm

*Measured with ripper point on ground and shank vertical.

Dozer equipment

	Overall length with dozer	Blade capacity (ISO 9246)	Blade length × height	Max. lift above ground	Max. drop below ground	Max. tilt adjustment	Pitch adjustment	Additional mass
Strengthened single tilt Semi-U dozer	8610 mm	10.6 m^3	4130 mm × 1815 mm	1380 mm	595 mm	615 mm	—	6490 kg
Strengthened dual tilt Semi-U dozer	8610 mm	10.6 m^3	4130 mm × 1815 mm	1380 mm	595 mm	805 mm	±5°	6550 kg

Blade capacities are based on the SAE recommended practice J1265. Use of high-tensile-strength steel in moldboard for strengthened blade construction. Blade tilt hose piping is mounted inside the dozer push arm to protect from damage.



Standard and optional equipment

Engine

Komatsu DBA127 turbocharged common rail direct injection diesel engine	●
EU Stage V compliant	●
High-performance single-plane cooling system	●
Adjustable idle shutdown	●
Delayed engine shutdown	●
Auto power off	●
Working mode selection system	●
Alternator 24 V / 140 A	●
Starter motor 24 V / 11 kW	●
Maintenance-free batteries 2 × 12 V / 160 Ah	●
Compatible with B20 diesel	●

Transmission and brakes

TORQFLOW transmission	●
Palm lever steering control (PCCS)	●
Multi-stage speed control	●
Directional gear preset	●
Neutral auto brake	●
Pivot turn	●

Undercarriage

8-roller track frames, suspension type	●
Equaliser bar shoulder pad	●
Track roller guard, end sections	●
Track shoe slip control mode	●
Final drive case wear guard	●
Segmented sprockets	●
Labyrinth type cartridge pin	●
610 mm single grouser shoes	●
710 mm single grouser shoes	○
560 mm, 610 mm, 660 mm extreme grouser shoes	○
660 mm single grouser shoes with hole	○
560 mm, 610 mm, 660 mm, 710 mm extreme grouser shoes, PLUS	○
Full length track roller guard	○

LED lighting system

Working lights: 2 high mount, 2 front, 4 side, 2 rear, 2 access	●
Ripper working light	●
Engine room lamp	●
Remote courtesy light	●

Hydraulic system

Blade response speed setting	●
Blade auto pitch	●
Ripper auto functions	●
Hydraulics for ripper incl. anti-drop valve	●

Cab

ROPS/FOPS cab (compliant to ISO 3471/3449) with damper mounts, double door wipers as well as front/rear window wipers, sun roller blinds, floormat, high mount footrest, interior lighting	●
Fully adjustable premium air-suspension seat with 2-point seat belt (3 inch)	●
Electrically adjustable consoles with armrests	●
8-inch touch-panel monitor	●
10-inch touch-panel sub monitor	●
Air conditioner	●
Fresh air filter with high efficiency (MERV 16)	●
Keyless start system	●
Remote key fob	●
Operator ID system linked to personalised settings	●
Integrated DAB+ radio with Bluetooth®	●
USB ports for charging (types A & C)	●
2 × 12 Volt power supply	●
Multifunction steering lever with FNR switch	●
Multifunction blade lever	●
Fixed ripper lever	●
Large storage space (glove box, coat hooks, cup holders, smartphone holder)	●

Service and maintenance

Swing-out hydrostatic-driven radiator fan with reversing function	●
Dry type air cleaner, double element with dust indicator and evacuator	●
Fuel tank with fast fill coupler	●
Multi-function video compatible colour monitor with Equipment Management and Monitoring System (EMMS) and efficiency guidance	●
Komtrax – Komatsu wireless monitoring system (4G)	●
Komatsu Care program (regional differences apply)	●
Grease gun holder	●
Remote lubrication for equaliser bar	●
Easy cab removal	●
Sampling ports for oils and coolant	●
Ground level service switch (electrical disconnect, access lights)	●
Fluid level on screen	●
Clogging detection sensor – hydraulics, powertrain, steering charge pump	●
Air pre-cleaner	●
Air pre-cleaner, with extension	●

Safety equipment

Horn	●
Back-up alarm	●
Rear-view mirror	●
Rear-view camera system	●
KomVision surround view system	●
Cab-integrated flashing beacon light	●
Electric parking brake and work equipment lock switches	●
Operator presence sensing system	●
Battery main switch	●
Secondary engine shutdown switch	●
Seat belt caution indicator	●
Tie-off points	●
Tie-down points	●
Walkway with handrails and toe boards	●
Operator authentication	●
Vandalism protection	●

Work equipment

Strengthened semi-U dozer, dual tilt	●
Spill guard for semi-U dozer	●
End bits, high efficiency type	●
Variable giant ripper	●
Variable multi-shank ripper	○
Rigid drawbar	○
Counterweight with hitch	○

Other equipment

Tool box	●
Tool kit	○

Further equipment on request

● standard equipment
○ optional equipment

This specification sheet may contain attachments and optional equipment that are not available in your area.
Please consult your local Komatsu distributor for those items you may require.
Materials and specifications are subject to change without notice.

Your Komatsu partner:

KOMATSU

komatsu.eu

© 2026 Komatsu Europe International N.V. All rights reserved. Printed in Europe. EENSS20520-01 10/2026