KOMATSU

PC230NHD-11



Hydraulic excavator

Engine power
123 kW / 165 HP @ 2000 rpm

Operating weight
23515 - 24315 kg

Bucket capacity
max. 1.45 m^3

PC230NHD-11





Engine power
123 kW / 165 HP @ 2000 rpm

Operating weight
23515 - 24315 kg

Bucket capacity
max. 1.45 m^3

Exceptional workability and

environmental performance

Powerful and environmentally friendly

- EU Stage V engine
- Adjustable idle shutdown
- Komatsu fuel-saving technology

Narrow heavy duty design

- Narrow heavy duty undercarriage
- Narrow upper structure
- Transport width only 2540 mm
- Easy transportation without special permits



Maximised efficiency

- Increased productivity
- Built-in versatility and superior productivity
- Enhanced engine management
- Improved hydraulic efficiency
- Komatsu Integrated Attachment Control (KIAC)

First-class comfort

- Fully air-suspended operator station
- Low-noise design
- Widescreen monitor

Safety first

- Komatsu SpaceCab™
- KomVision surround view system
- Neutral position detection system

Quality you can rely on

- Komatsu-quality components
- Extensive dealer support network

Komtrax

- Komatsu Wireless Monitoring System
- 4G mobile communications
- Integrated communication antenna
- Increased operational data and reports

KOMATSU CARE™

A maintenance program
for Komatsu customers

PC230NHD-11



Higher productivity

The PC230NHD-11 is quick and precise. It features a powerful Komatsu EU Stage V engine, Komatsu's Closed Center Load Sensing (CLSS) hydraulic system and first-class Komatsu comfort to provide a fast response and unrivalled productivity for its class.

Komatsu fuel-saving technology

Fuel consumption on the PC230NHD-11 is lower by up to 15% (compared to PC230NHD-8). Engine management is enhanced. The variable speed matching of the engine and hydraulic pump and a viscous fan clutch guarantee efficiency and precision during single and combined movements.

Adjustable idle shutdown

The Komatsu auto idle shutdown automatically turns off the engine after it idles for a set period of time. This feature can easily be programmed from 5 to 60 minutes, to reduce unnecessary fuel consumption and exhaust emissions, and to lower operating costs. An Eco-gauge and the Eco guidance tips on the cab monitor further encourage efficient operations.

Powerful and environmentally friendly

Komatsu EU Stage V

The Komatsu EU Stage V engine is productive, dependable and efficient. With ultra-low emissions, it provides a lower environmental impact and a superior performance to help reduce operating costs and lets the operator work in complete peace of mind.

Heavy-duty aftertreatment

The aftertreatment system combines a Komatsu Diesel Particulate Filter (KDPF) and Selective Catalytic Reduction (SCR). The SCR injects the correct amount of AdBlue® into the system at the proper rate to break down NOx into water (H_2O) and non-toxic nitrogen gas (N_2). NOx emissions are reduced by 80% vs. EU Stage IIIB engines.

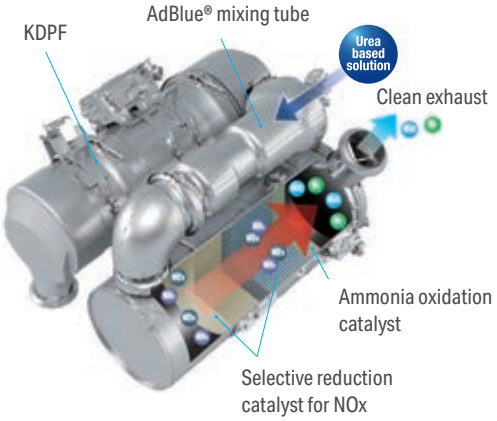

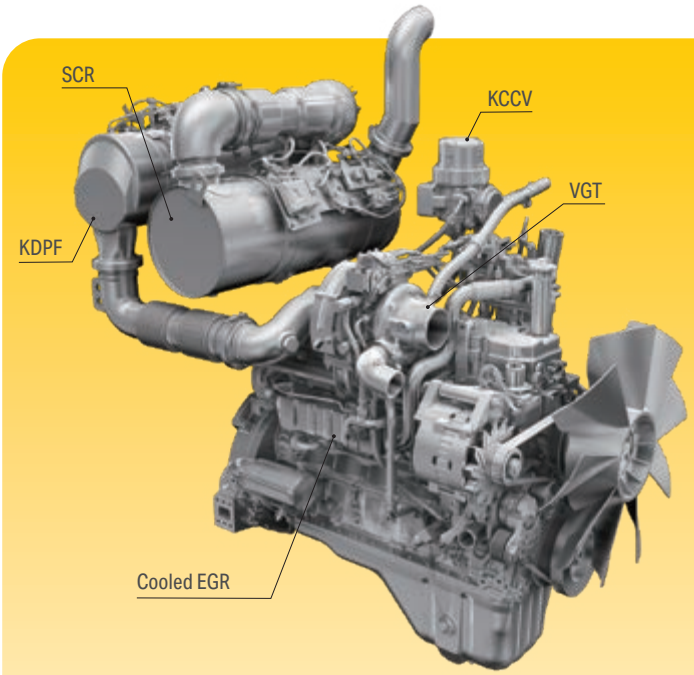

High-Pressure Common Rail (HPCR)

To achieve complete fuel burn and lower exhaust emissions, the heavy-duty High-Pressure Common Rail fuel injection system is computer controlled to deliver a precise quantity of pressurised fuel into the redesigned engine combustion chamber by multiple injections.

Exhaust Gas Recirculation (EGR)

Cooled EGR is a technology well-proven in current Komatsu engines. The increased capacity of the EGR cooler now ensures very low NOx emissions and a better engine performance.

Komatsu Closed Crankcase Ventilation (KCCV)

Crankcase emissions (blow-by gas) are passed through a CCV filter. The oil mist trapped in the filter is returned back to the crankcase while the filtered gas is returned to the air intake.

Variable Geometry Turbo (VGT)

The VGT provides optimal airflow to the engine combustion chamber under all speed and load conditions. Exhaust gas is cleaner, fuel economy is improved while machine power and performance are maintained.

A wide choice of options

Two optional attachment lines are available and 15 attachment memory settings are simply customised. Combined with a standard-fit hydraulic quick coupler power circuit, it's easier than ever to switch working styles. With a choice of arms you can configure the PC230NHD-11 to match specific demands for transport, working envelope or duty.

6 working modes

The PC230NHD-11 delivers the power required with the lowest fuel usage. 6 working modes are available: Power, Lifting/Fine Operation, Breaker, Economy, Attachment Power and Attachment Economy. The operator can ideally balance the Economy mode between power and economy to match the work at hand. The oil flow delivered to hydraulic attachments is also adjustable directly on the class-leading widescreen monitor panel.



Narrow heavy duty undercarriage and narrow upper structure



Two optional hydraulic lines to mount a variety of attachments



Komatsu Integrated Attachment Control (KIAC) for up to 15 tool presets for oil flow and pressure



Versatility at your fingertips: select the perfect setting for each job





Maximised efficiency

Bigger, heavier and sturdy undercarriage structure

The PC230NHD-11 has a bigger and heavier undercarriage than the PC210NLC, specifically designed for jobs in severe duty ground conditions. It has a narrow gauge (shipping width 2.5 m) for easy transport, and is intended for mountainous and other areas requiring an extra strong undercarriage.

First-class comfort

Enhanced work environment

Designed to prioritise both productivity and operator well-being, the Komatsu crawler excavator cab features thoughtful ergonomics with high-visibility handrails, and improved interior LED lighting. Stepping inside reveals a sleek, dark colour scheme complemented by an effortlessly cleanable floor mat. Upgraded UV-protective tint on the cab rear window minimises sun exposure and helps maintain a cool working environment.

Future-proof customisable workspace

The operator cab offers extensive customisation possibilities. A multi-functional utility bar allows for adding personal accessories such as additional monitors or tablets, while dual USB ports (USB-A & USB-C) enable mobile device charging.





Convenient and secure entry to the spacious, well-insulated, low-noise cab



Multi-functional utility bar
(items shown are for illustrative purposes only)



Optional premium seat with top quality cushioning, auto weight adjustment, lumbar support, climate control system, available with optional multi-position armrests and ergonomic control levers



Safety first

Optimal jobsite safety

Safety features on the Komatsu PC230NHD-11 comply with the latest industry standards and work in synergy to minimise risks to people in and around the machine. A neutral detection system for travel and work equipment levers increase jobsite safety, along with a seat belt caution indicator and an audible travel alarm. Highly durable anti-slip plates – with additional high friction covering – maintain long term traction performance.



Safe maintenance

Thermal guards around high temperature areas of the engine, protected fan belt and pulleys, a pump/engine partition that prevents hydraulic oil from spraying onto the engine, a wide catwalk and exceptionally sturdy handrails: in Komatsu tradition, the highest safety level is provided for a fast and smooth maintenance.



Komatsu SpaceCab™

The ROPS cab has a tubular steel frame and provides high shock absorbency, impact resistance and durability. The seat belt is well designed to keep the operator in the safety zone of the cab in the event of a rollover. Optionally the cab can be fitted with a Falling Object Protective System (FOPS) with openable front guard.



KomVision

KomVision machine visibility gives the operator a constant clear view of the safety zone around the machine. This allows the operator to focus on the work at hand even in low light conditions.



An evolutionary interface

Helpful information is now easier than ever to find and understand with the upgraded monitor interface. An optimal main screen for the ongoing work can be selected simply by pressing the F3 key.

Lower operating costs

Komatsu ICT contributes to the reduction of operating costs by assisting to comfortably and efficiently manage operations. It raises the level of customer satisfaction and the competitive edge of our products.

Widescreen monitor

Conveniently customisable and with a choice of 26 languages, the widescreen monitor with simple switches and multifunction keys gives fingertip access to a large range of functions and operating info. The rear camera view and an AdBlue® level gauge are now incorporated into the default main screen.



Quick view on the operation logs



With KomVision, various camera view options are available whilst maintaining constant "birdview" from above the machine



Operator identification function

Information & communication technology



Knowledge

You get quick answers to basic and critical questions about your machines – what they're doing, when they did it, where they're located, how they can be used more efficiently and when they need to be serviced. Performance data is relayed by wireless communication technology (satellite, GPRS or 4G depending on model) from the machine to a computer and to the local Komatsu distributor – who's readily available for expert analysis and feedback.

Convenience

Komtrax enables convenient fleet management on the web, wherever you are. Data is analysed and packaged specifically for effortless and intuitive viewing in maps, lists, graphs and charts. You can foresee eventual maintenance issues and required spare parts, and troubleshoot a problem before Komatsu technicians arrive on site.

KOMTRAX

The way to higher productivity

Komtrax uses the latest wireless monitoring technology. Compatible on PC, smartphone or tablet, it delivers insightful and cost saving information about your fleet and equipment, and offers a wealth of information to facilitate peak machine performance. By creating a tightly integrated web of support it allows proactive and preventive maintenance and helps to efficiently run a business.

Power

The detailed information that Komtrax puts at your fingertips 24 hours a day, 7 days a week gives the power to make better daily and long-term strategic decisions – at no extra cost. Problems can be anticipated, maintenance schedules customised, downtime minimised and machines kept where they belong: working on the jobsite.



Easy maintenance

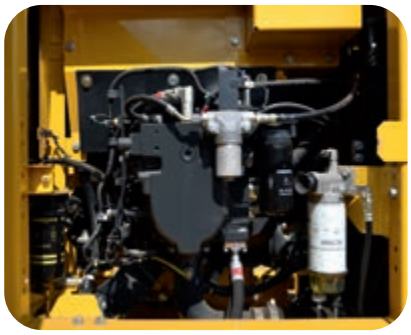

Central service points

Komatsu designed the PC230NHD-11 with centralised and conveniently located service points to make necessary inspections and maintenance quick and easy.

Komatsu Care

Komatsu Care is a maintenance program that comes as standard with your new Komatsu machine. It covers factory-scheduled maintenance, performed with Komatsu Genuine parts by Komatsu-trained technicians. Depending on your machine's engine, it also offers extended coverage of the Komatsu Diesel Particulate Filter (KDPF) and of the Selective Catalytic Reduction (SCR). Please contact your local Komatsu distributor for terms and conditions.

Long-life oil filters

The Komatsu Genuine hydraulic oil filter uses high-performance filtering material for long replacement intervals, which significantly reduces maintenance costs.



AdBlue® tank

For simple access, the AdBlue® tank is installed on the front stairway.

Flexible warranty

When you purchase Komatsu equipment, you gain access to a broad range of programmes and services that have been designed to help you get the most from your investment. For example, Komatsu's Flexible Warranty Programme provides a range of extended warranty options on the machine and its components. These can be chosen to meet your individual needs and activities. This programme is designed to help reduce total operating costs.

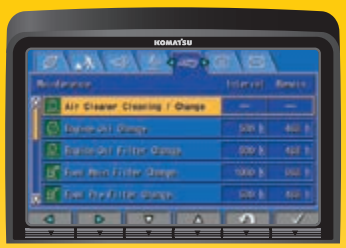

Basic maintenance screen

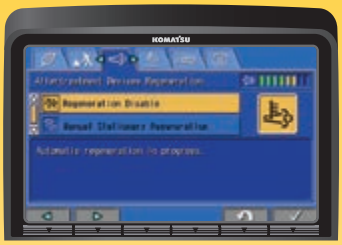

Aftertreatment device regeneration screen for the KDPF



AdBlue® level and refill guidance



Quality you can rely on

Komatsu-quality

With the latest computer techniques and a thorough test programme, Komatsu produces equipment to meet your highest standards. All major components of the PC230NHD-11 are designed and directly manufactured by Komatsu, and essential machine functions are perfectly matched for a highly reliable and productive excavator.

Rugged design

Maximum toughness and durability are the cornerstones of Komatsu's philosophy – along with safety and top class customer service. Single piece plates and castings are used in key areas of the machine's structure for good load distribution. Highly durable rubbing strips on the underside of the arm protect the structure against impact damage.

Extensive support network

The extensive Komatsu distribution and dealer network is standing by to help keep your fleet in optimum condition. Customised servicing packages are available, with express availability of spare parts, to make sure that your Komatsu equipment continues to perform at its peak.





Durable and reliable undercarriage design for maximum protection



Cast boom foot and single piece boom plates

Specifications

Engine

Model	Komatsu SAA6D107E-3
Type	Common rail direct injection, water-cooled, emissionised, turbocharged, after-cooled diesel
Engine power	
at rated engine speed	2000 rpm
ISO 14396	123 kW / 165 HP
ISO 9249 (net engine power)	123 kW / 165 HP
No. of cylinders	6
Bore × stroke	107 × 124 mm
Displacement	6.69 l
Air filter type	Double element type with monitor panel dust indicator and auto dust evacuator
Cooling	Suction type cooling fan with radiator fly screen
Fuel	Diesel fuel, conforming to EN590 Class 2/Grade D. Paraffinic fuel capability (HVO, GTL, BTL), conforming to EN 15940:2016

Hydraulic system

Type	HydrauMind. Closed-centre system with load sensing and pressure compensation valves
Additional circuits	2 additional circuits with proportional control can be installed
Main pump	2 variable displacement piston pumps supplying boom, arm, bucket, swing and travel circuits
Maximum pump flow	475 l/min
Relief valve settings	
Implement	380 kg/cm²
Travel	380 kg/cm²
Swing	295 kg/cm²
Pilot circuit	33 kg/cm²

Service refill capacities

Fuel tank	325 l
Radiator	30.7 l
Engine oil	23.1 l
Swing drive	6.5 l
Hydraulic tank	132 l
Final drive (each side)	5.0 l
AdBlue® tank	18.8 l

Swing system

Type	Axial piston motor driving through planetary double reduction gearbox
Swing lock	Electrically actuated wet multidisc brake integrated into swing motor
Swing speed	0 - 12.4 rpm
Swing torque	65 kNm

Drives and brakes

Steering control	2 levers with pedals giving full independent control of each track
Drive method	Hydrostatic
Travel operation	Automatic 3-speed selection
Gradeability	70%, 35°
Max. travel speeds	
Lo / Mi / Hi	3.0 / 4.1 / 5.5 km/h
Maximum drawbar pull	20600 kg
Brake system	Hydraulically operated discs in each travel motor

Undercarriage

Construction	X-frame centre section with box section track frames
Track assembly	
Type	Fully sealed
Shoes (each side)	47
Tension	Combined spring and hydraulic unit
Rollers	
Track rollers (each side)	8
Carrier rollers (each side)	2

Environment

Engine emissions	Fully complies with EU Stage V exhaust emission regulations
Noise levels	
LwA external	100 dB(A) (2000/14/EC Stage II)
LpA operator ear	67 dB(A) (ISO 6396 dynamic test)
Vibration levels (EN 12096:1997)	
Hand/arm	≤ 2.5 m/s² (uncertainty K = 0.49 m/s²)
Body	≤ 0.5 m/s² (uncertainty K = 0.24 m/s²)

Contains fluorinated greenhouse gas HFC-134a (GWP 1430).
Quantity of gas 0.9 kg, CO_2 equivalent 1.29 t

Operating weight (appr.)	Mono boom		Two-piece boom	
Triple grouser shoes	Operating weight	Ground pressure	Operating weight	Ground pressure
550 mm	23515 kg	0.57 kg/cm²	24315 kg	0.59 kg/cm²

Operating weight, including specified work equipment, 2.4 m arm, 650 kg bucket, operator, lubricant, coolant, full fuel tank and the standard equipment.

Max. bucket capacity and weight	Mono boom		Two-piece boom	
Arm length	2.4 m	2.9 m	2.4 m	2.9 m
Material weight up to 1.2 t/m³	1.45 m³ 1050 kg	1.30 m³ 975 kg	1.33 m³ 1000 kg	1.21 m³ 925 kg
Material weight up to 1.5 t/m³	1.23 m³ 950 kg	1.10 m³ 875 kg	1.13 m³ 900 kg	1.03 m³ 850 kg
Material weight up to 1.8 t/m³	1.00 m³ 850 kg	0.96 m³ 800 kg	0.98 m³ 825 kg	0.89 m³ 775 kg

Max. capacity and weight have been calculated according to ISO 10567:2007.
Please consult with your distributor for the correct selection of buckets and attachments to suit the application.

Bucket and arm force		
Arm length	2.4 m	2.9 m
Bucket digging force	16500 kg	14100 kg
Bucket digging force at PowerMax	17500 kg	15200 kg
Arm crowd force	12200 kg	10300 kg
Arm crowd force at PowerMax	13000 kg	11000 kg

Dimensions and performance figures

Machine dimensions		PC230NHD-11
A	Overall width of upper structure	2540 mm
B	Overall height of cab	3105 mm
C	Overall length of basic machine	4955 mm
D	Tail length	2860 mm
	Tail swing radius	2880 mm
E	Clearance under counterweight	1125 mm
F	Machine tail height	2295 mm
F'	Machine tail height (top of engine cover)	2810 mm
G	Ground clearance	465 mm
H	Tumbler centre distance	3410 mm
I	Track length	4305 mm
J	Track gauge	1990 mm
K	Track shoe width	550 mm
L	Overall track width with 550 mm shoes	2540 mm

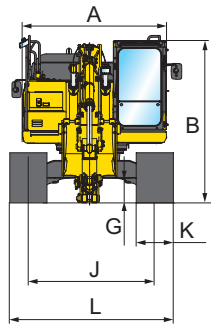

Mono boom

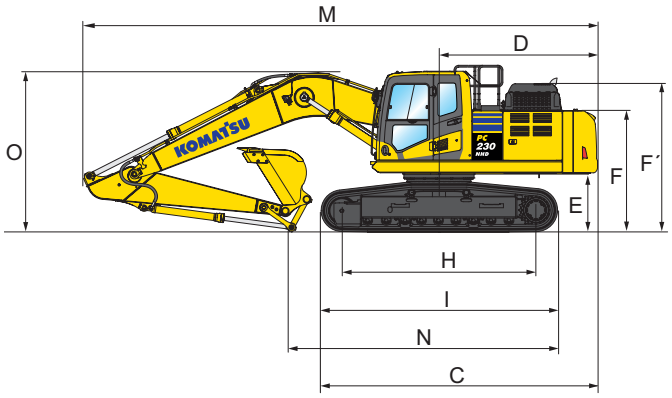

Two-piece boom

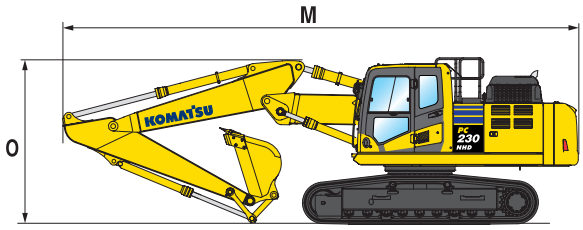

Transport dimensions		Mono boom		Two-piece boom	
	Arm length	**2.4 m**	**2.9 m**	**2.4 m**	**2.9 m**
M	Transport length	9630 mm	9690 mm	9495 mm	9600 mm
N	Length on ground (transport)	5675 mm	4875 mm	6035 mm	5250 mm
O	Overall height (to top of boom)	3190 mm	3180 mm	3215 mm	3160 mm


KOMATSU

Working range

Mono boom

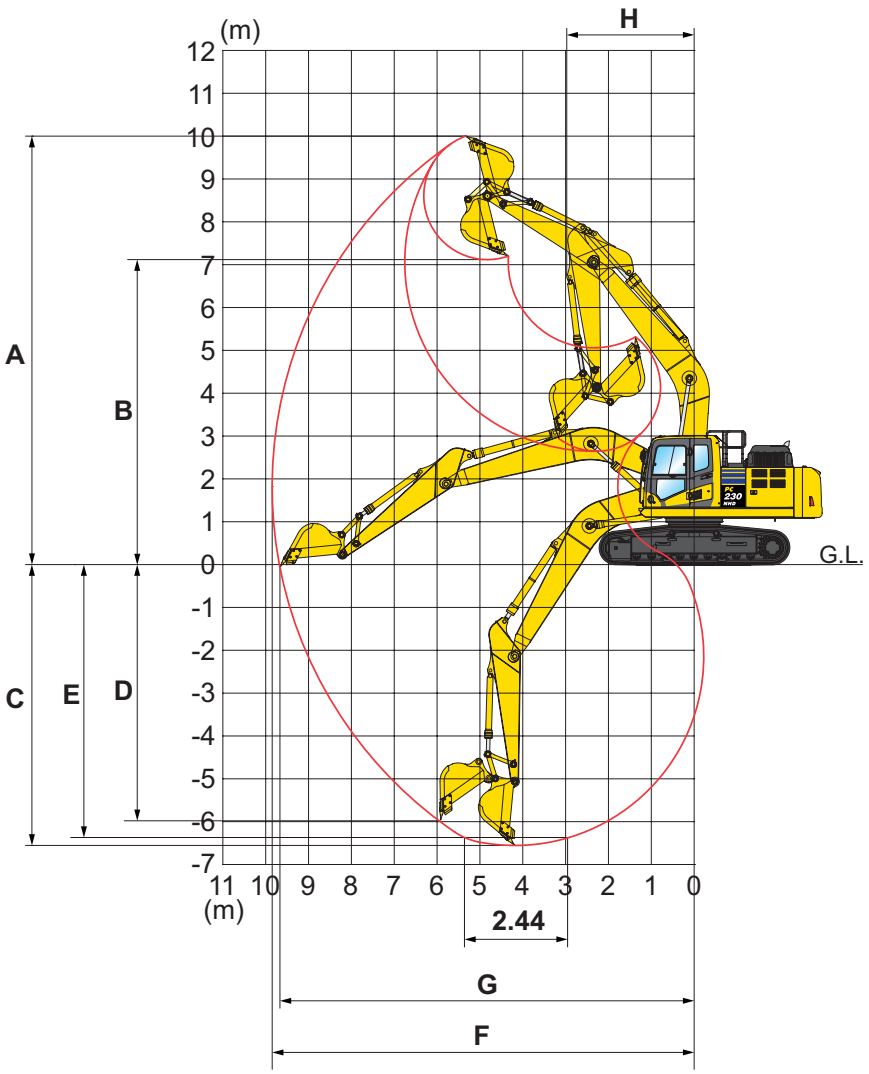

Working range

	Arm length	2.4 m	2.9 m
A	Max. digging height	9765 mm	10095 mm
B	Max. dumping height	6895 mm	7215 mm
C	Max. digging depth	5955 mm	6465 mm
D	Max. vertical wall digging depth	5365 mm	5885 mm
E	Max. digging depth of cut for 2.44 m level	5730 mm	6280 mm
F	Max. digging reach	9355 mm	9850 mm
G	Max. digging reach at ground level	9160 mm	9655 mm
H	Min. swing radius	3065 mm	2975 mm
	Max. height at min. swing radius	8155 mm	8110 mm

Two-piece boom

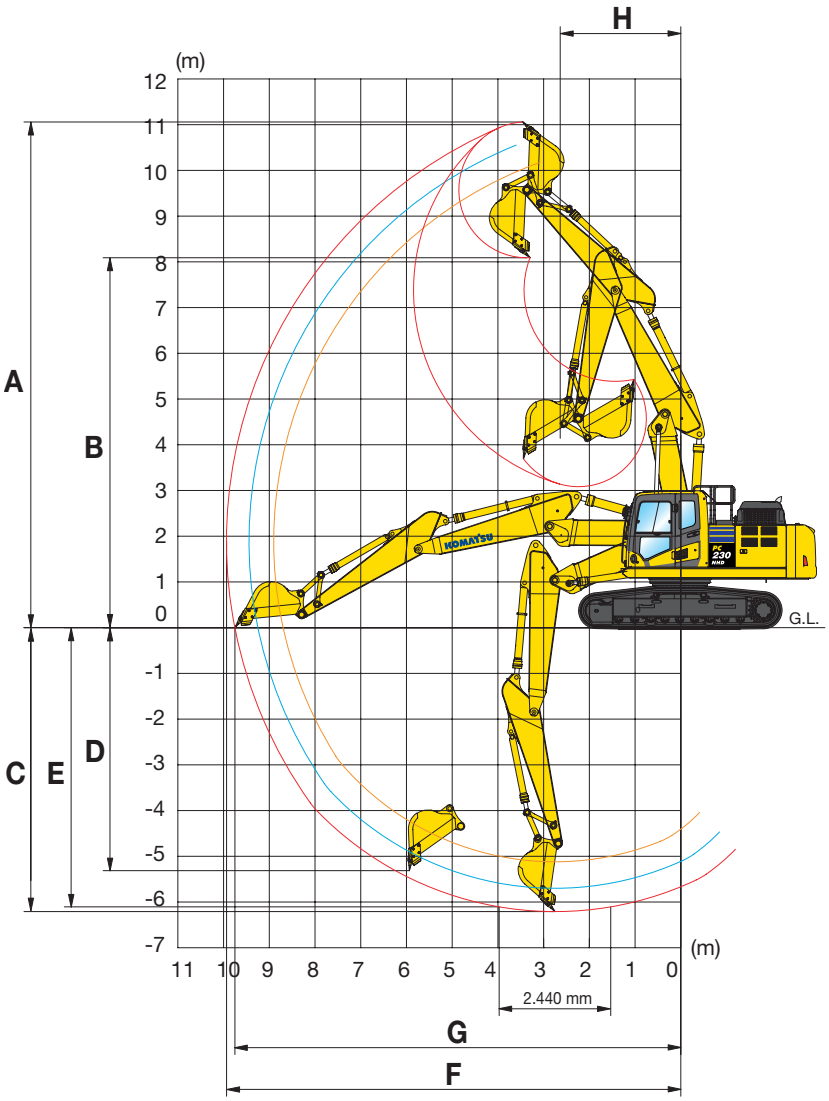

Working range

	Arm length	2.4 m	2.9 m
A	Max. digging height	10630 mm	11085 mm
B	Max. dumping height	7665 mm	8115 mm
C	Max. digging depth	5670 mm	6185 mm
D	Max. vertical wall digging depth	4710 mm	5225 mm
E	Max. digging depth of cut for 2.44 m level	5575 mm	6080 mm
F	Max. digging reach	9415 mm	9935 mm
G	Max. digging reach at ground level	9221 mm	9750 mm
H	Min. swing radius	2830 mm	2640 mm
	Max. height at min. swing radius	8402 mm	8390 mm

Lifting capacity

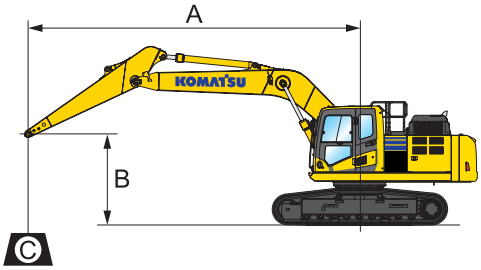

A – Reach from swing center

B – Bucket hook height

C – Lifting capacities

– Rating over front

– Rating over side

– Rating at maximum reach

Weights:
With 2.4 m arm: bucket linkage and bucket cylinder: 359 kg
With 2.9 m arm: bucket linkage and bucket cylinder: 335 kg

Mono boom

With 550 mm shoes

Arm length	A / B		7.5 m		6.0 m		4.5 m		3.0 m		1.5 m	
2.4 m	7.5 m	kg	*6010	5530								
	6.0 m	kg	*5620	4040			*7080	4870	*7350	*7350		
	4.5 m	kg	5450	3380			7670	4720	*9000	7190	*12430	*12430
	3.0 m	kg	4980	3070	5300	3270	7410	4490	*11330	6640		
	1.5 m	kg	4830	2960	5190	3170	7160	4270	11060	6200		
	0.0 m	kg	4980	3030	5120	3110	7000	4130	10820	6010		
	−1.5 m	kg	5510	3320			6950	4090	10790	5980	*12530	11010
	−3.0 m	kg	6810	4060			7050	4180	10920	6090	*17190	11220
	−4.5 m	kg										

2.9 m	7.5 m	kg	*4040	*4040			*4760	*4760						
	6.0 m	kg	*3810	3640			*6450	4990						
	4.5 m	kg	*3790	3110	5470	3420	*7160	4820	*8120	7370				
	3.0 m	kg	*3920	2840	5350	3310	7490	4560	*10460	6790				
	1.5 m	kg	*4210	2740	5220	3190	7210	4310	11160	6280				
	0.0 m	kg	4570	2790	5120	3100	7000	4130	10810	5990	*7290	*7290		
	−1.5 m	kg	4970	3010	5090	3070	6910	4050	10710	5910	*11800	10770	*7580	*7580
	−3.0 m	kg	5930	3550			6960	4090	10790	5970	*18120	10970	*12220	*12220
	−4.5 m	kg	8540	4990					*10660	6200	*14860	11360		

* Load is limited by hydraulic capacity rather than tipping. Ratings are based on SAE Standard No. J1097.
Rated loads do not exceed 87% of hydraulic lift capacity or 75% of tipping load.
When lifting with additional equipment installed to the arm, please subtract the weight of all additional equipment from the values stated.

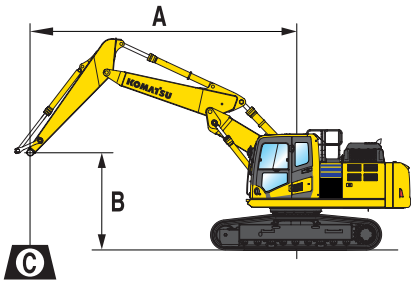

A – Reach from swing center

B – Bucket hook height

C – Lifting capacities

– Rating over front

– Rating over side

– Rating at maximum reach

Weights:
With 2.4 m arm: bucket linkage and bucket cylinder: 359 kg
With 2.9 m arm: bucket linkage and bucket cylinder: 335 kg

Two-piece boom

With 550 mm shoes

Arm length	A / B		7.5 m		6.0 m		4.5 m		3.0 m		1.5 m	
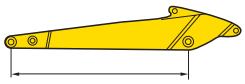 2.4 m	7.5 m	kg	*5800	5400					*7800	7750		
	6.0 m	kg	*5350	3950			*6350	4850	*8000	7600		
	4.5 m	kg	*5250	3300			*6700	4650	*9100	7150		
	3.0 m	kg	5100	3000	5450	3200	*7350	4400	*11450	6550		
	1.5 m	kg	4950	2900	5350	3100	7400	4200	11400	6100		
	0.0 m	kg	5100	2950	5300	3050	7250	4050	11200	5900		
	−1.5 m	kg	5650	3250			7200	4000	11150	5850	*12350	10850
	−3.0 m	kg										

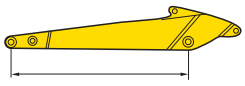 2.9 m	7.5 m	kg	*3600	*3600			*4500	*4500	*6400	*6400		
	6.0 m	kg	*3300	*3300			*5750	4700	*6850	*6850		
	4.5 m	kg	*3200	2800	*4850	3100	*6000	4450	*8050	7000	*11150	*11150
	3.0 m	kg	3250	2500	*5000	2950	6600	4150	*9900	6300		
	1.5 m	kg	3450	2400	5050	2800	7050	3850	11050	5750		
	0.0 m	kg	3800	2450	4950	2700	6850	3650	10700	5450	*7250	*7250
	−1.5 m	kg	4450	2650	4950	2700	6750	3600	10600	5350	*11850	10100
	−3.0 m	kg										

* Load is limited by hydraulic capacity rather than tipping. Ratings are based on SAE Standard No. J1097.
Rated loads do not exceed 87% of hydraulic lift capacity or 75% of tipping load.
When lifting with additional equipment installed to the arm, please subtract the weight of all additional equipment from the values stated.

Standard and optional equipment

Engine

Komatsu SAA6D107E-3 turbocharged common rail direct injection diesel engine	●
EU Stage V compliant	●
Suction type cooling fan with radiator fly screen	●
Automatic engine warm-up system	●
Engine overheat prevention system	●
Fuel control dial	●
Auto-deceleration function	●
Adjustable idle shutdown	●
Engine key stop	●
Engine ignition can be password secured on request	●
Alternator 24 V / 90 A	●
Starter motor 24 V / 5.5 kW	●
Batteries 2 × 12 V / 180 Ah	●

Hydraulic system

Electronic closed-centre load sensing (E-CLSS) hydraulic system (HydrauMind)	●
Pump and engine mutual control (PEMC) system	●
6-working mode selection system; Power mode, Economy mode, Breaker mode, Attachment Power and Attachment Economy mode, and Lifting/Fine Operation mode	●
PowerMax function	●
PPC wrist control levers for arm, boom, bucket and swing, with sliding proportional control for attachments and 3 auxiliary buttons	●
Prepared for hydraulic quick-coupler	●
Additional hydraulic functions	○
Komatsu Integrated Attachment Control (KIAC)	○

Undercarriage

Track roller guards	●
Track frame under-guards	●
550 mm triple grouser shoes	●
Full length track roller guards	○

Drives and brakes

Hydrostatic, 3-speed travel system with automatic shift and planetary gear type final drives, and hydraulic travel and parking brakes	●
PPC control levers and pedals for steering and travel	●

Cabin

Reinforced safety SpaceCab™; highly pressurised and tightly sealed hyper viscous mounted cab with tinted safety glass windows, large roof window with sun shade, pull-up type front window with locking device, removable lower window, front window wiper with intermittent feature, sun roller blind, cigarette lighter, ashtray, luggage shelf, std. floor mat, additional floor mat	●
Heated, high-back air-suspended seat with lumbar support, console mounted height adjustable arm rests, and retractable seat belt	●
Automatic climate control system	●
12 / 24 Volt power supplies	●
USB-A / USB-C power supplies	●
Utility bar	●
Beverage holder and magazine rack	●
Hot and cool box	●
DAB+ radio with Bluetooth®, USB, AUX and hands-free kit	●
Premium comfort seat	○
Lower wiper	○
Rain visor (not with OPG)	○

Service and maintenance

Automatic fuel line de-aeration	●
Double element type air cleaner with dust indicator and auto dust evacuator	●
Komtrax – Komatsu wireless monitoring system (4G)	●
Komatsu Care – a maintenance program for Komatsu customers	●
Multifunction video compatible colour monitor with Equipment Management and Monitoring System (EMMS) and efficiency guidance	●
Toolkit	●
Service points	○
Automatic greasing system	○

LED lighting system

Working lights: 2 revolving frame, 1 boom (l.h.)	●
Coming home light function	●
Additional working lights (#1): 2 cab roof (front), 1 cab roof (rear), 1 boom (r.h.), 1 counterweight, beacon	○
Additional working lights (#2): 4 cab roof (front), 1 cab roof (rear), 1 boom (r.h.), 1 counterweight, 2 boom cylinders, 2 revolving frame (l.h. + r.h.), beacon	○

Safety equipment

KomVision surround view system	●
Electric horn	●
Overload warning device	●
Audible travel alarm	●
Boom safety valves	●
Large handrails	●
Rear-view mirrors (for cab adjustable without tools)	●
Battery main switch	●
ROPS compliant to ISO 12117-2:2008	●
Emergency engine stop switch	●
Seat belt caution indicator	●
Neutral position detection system	●
Arm safety valve	●
OPG Level II front guard (FOPS), hinged type	○
OPG Level II top guard (FOPS)	○

Work equipment

Mono boom	○
Two-piece boom	○
Bucket linkage with lifting eye	○
2.4 m; 2.9 m arms	○
Komatsu buckets	○
Komatsu breakers	○

Other equipment

Standard counterweight	●
Remote greasing for swing circle and pins	●
Electric refuelling pump with automatic shut-off function	●
Biodegradable oil for hydraulic system	○
Customised paint	○

Further equipment on request

● standard equipment
○ optional equipment



A wide range of buckets and attachments is available. Your Komatsu distributor is ready to assist you with the selection of suitable options.

This specification sheet may contain attachments and optional equipment that are not available in your area.
Please consult your local Komatsu distributor for those items you may require.
Materials and specifications are subject to change without notice.

Your Komatsu partner:

KOMATSU

komatsu.eu

© 2026 Komatsu Europe International N.V. All rights reserved. Printed in Europe. UENSS19203 03/2026